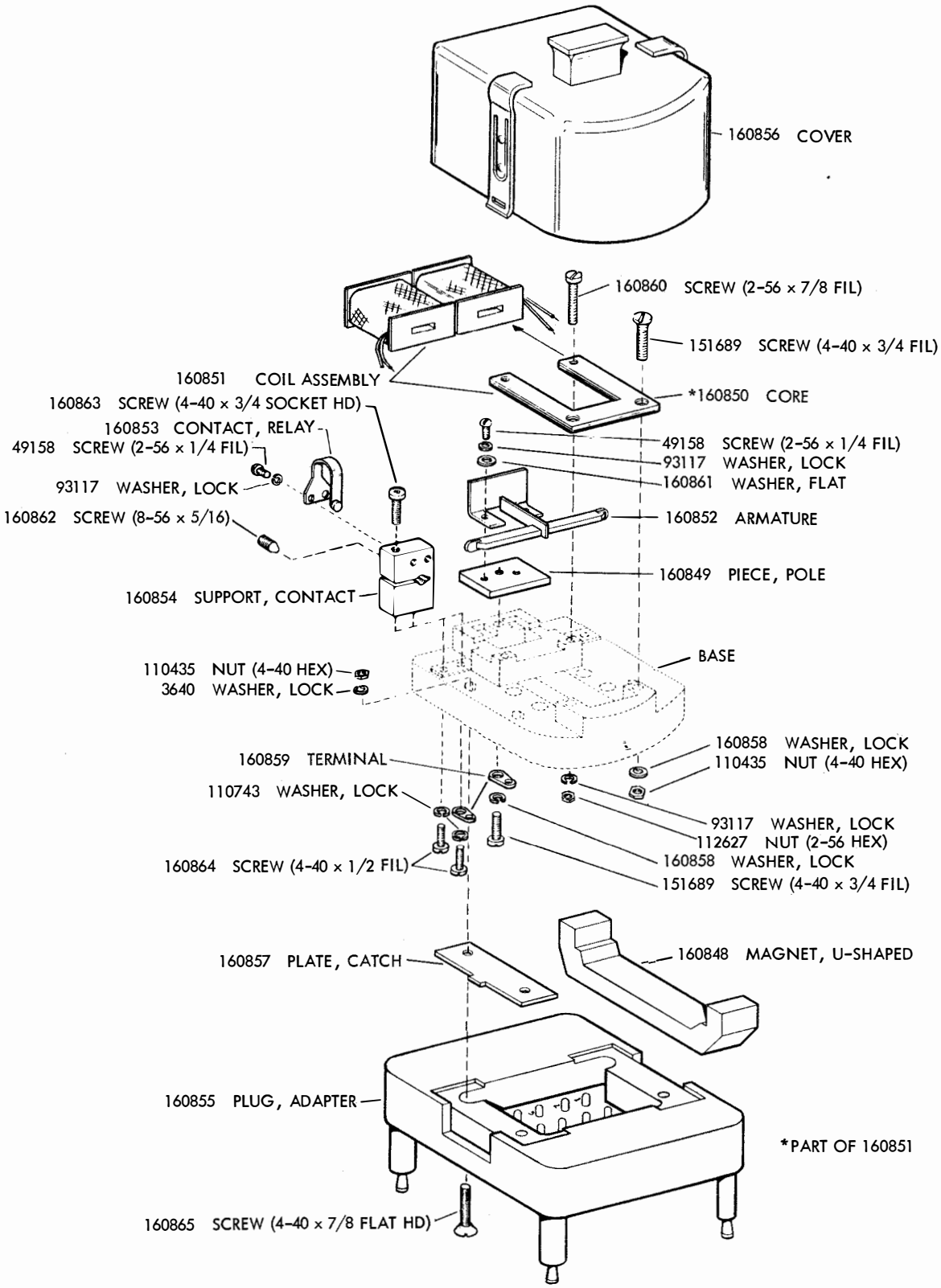

33RY LINE RELAY