5- TO 8-LEVEL UNIVERSAL STATION CONVERTERS

SCHEMATIC WIRING DIAGRAMS

CONTENTS PAGE

1. GENERAL

1.01 This section is reissued to include the latest issues of the schematic wiring diagrams for the 5- to 8-level Signal-to-Tape and Tape-to-Tape Universal Station Converter terminals. Since this is a general revision, marginal arrows have been omitted.

1.02 The location of each wiring diagram is indicated by its position in the index. The index also lists the subject matter of each wiring diagram, and its current issue.

1.03 For wiring information concerning the mechanical units associated with the converter terminals, refer to the appropriate section.

2. DIAGRAM INDEX

SUBJECT	DRAWING NUMBER	ISSUE 1	2	3	4	5	6
Automatic LTRS Feed-Out Assembly, TP194595	5887		4				
Selector Magnet Driver, TP193400	5949		2				
Tape-to-Tape Panel Assembly, VCL283 and VCL316	6021		3				
Service Unit, TP194605	6023		3				
Feed-Out Assembly, TP194608	6037		2				
Transfer Tree Module, TP194670	6039		3				
Transfer Tree Module, TP194670	6081		4				
TP193400, TP194595 and TP194706 Assemblies	6083		3				
Diode Matrix Assembly, TP194671	6087		2				
Control Module, TP194672	6088		4				
Cabinet Schematic, 5- to 8-level	6091	A	9				
Power Schematic, 5- to 8-level	6364		4				
Translation Schematic, 5- to 8-level	6365		Orig				
Cabinet Cable Routing, 5- to 8-level	6366		A				
Translation Chart for TP194718 Cable Assembly	6370		3				
Translation Chart for TP194719 Cable Assembly	6371		4				

NO.	NOTES
1.	REFER TO 6084 AND 6036WD FOR WIRING LIST.
2.	CONNECTIONS "TB" ARE ON 194636 TERMINAL BOARD LOCATED ON 194605 SERVICE UNIT.
3.	ALL VOLTAGE DC UNLESS OTHERWISE SPECIFIED.
4.	⊢ INDICATES FEMALE AND → INDICATES MALE TERMINALS
5.	ALL CAPACITANCE VALUES IN MICROFARADS, UNLESS OTHERWISE SPECIFIED.
6.	TERMINAL DESIGNATION ENCLOSED IN PARENTHESES ARE FOR REFERENCE AND ARE NOT MARKED ON COMPONENT.

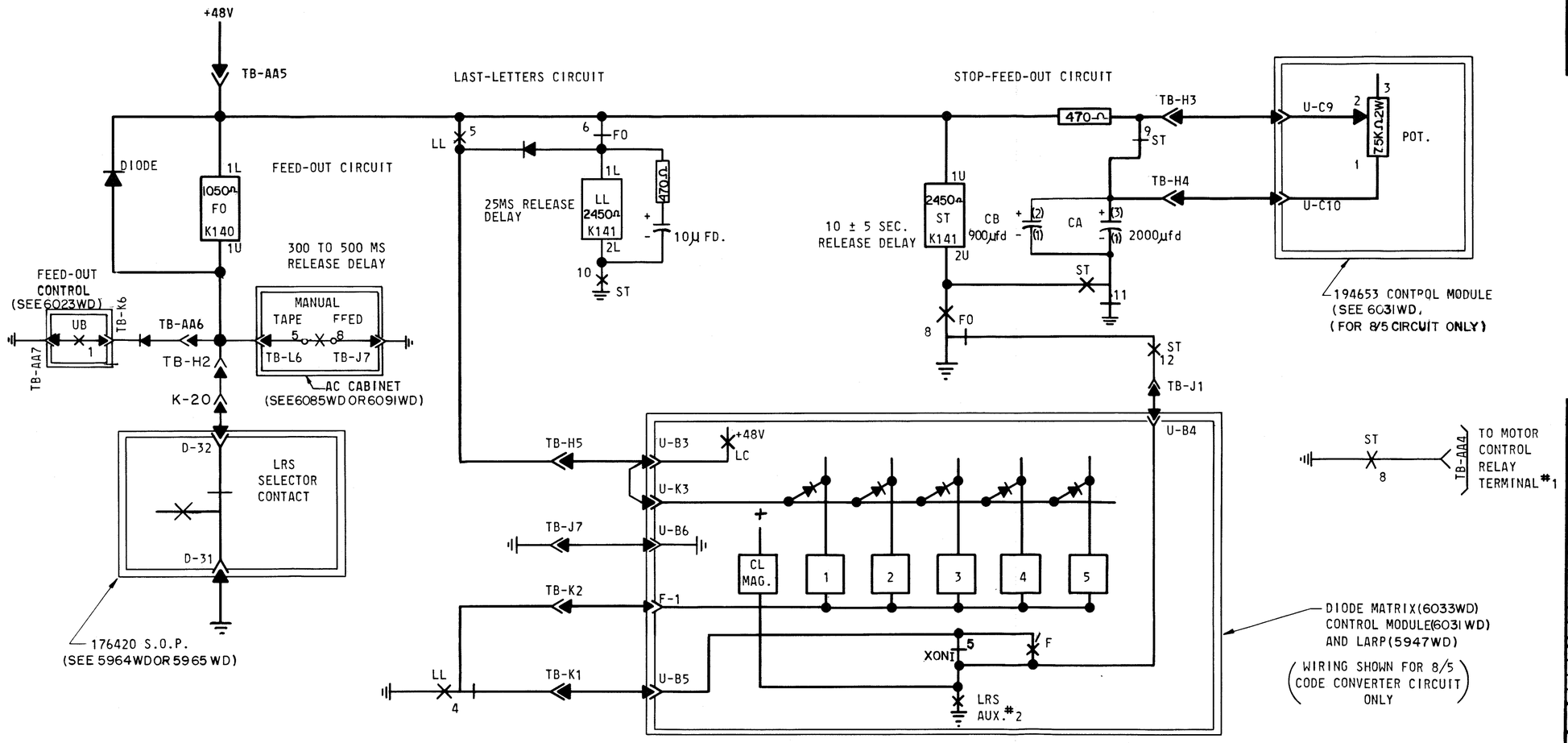

5887WD

ISSUE	DATE	AUTH. NO.
2	9-24-63	78176
3	8-10-64	83011
4	9-25-64	83011-1

SCHEMATIC
AUTOMATIC
"LTRS" FEED OUT
194595 ASSEMBLY

APPROVALS

D AND R	E OF M
HJK	

E-NUMBER

PROD. NO. 5887WD

DATE: 8-17-62

P.D. FILE NO. 3-95AAA

DRAWN. E.R. CHKD. APPD.

ENGD. P.H.B.

TELETYPE CORPORATION

5887WD

NO.	NOTES
1.	REFER TO 5826WD AND 6035WD FOR ACTUAL AND WIRING LIST.
2.	CIRCUIT IS WIRED FOR .020 A SIGNAL LINE INPUT. FOR .060A INPUT, 450 OHM RESISTOR MUST BE CHANGED TO 140 OHM.
3.	IN ORDER TO BLIND THE SELECTOR MAGNET DRIVER TO LINE SIGNALS AND MAINTAIN A STEADY MARK OUTPUT, THE FOLLOWING CHANGE IS RECOMMENDED; ADD A STRAP ACROSS TERMINALS BB7 AND BB4
4.	ALL VOLTAGES DC UNLESS OTHERWISE SPECIFIED.
5.	ALL CAPACITANCE VALUES IN MICROFARADS UNLESS OTHERWISE SPECIFIED
6.	⟩— INDICATES FEMALE AND —⟩ INDICATES MALE TERMINALS.
7.	TERMINAL DESIGNATIONS ENCLOSED IN PARENTHESES ARE FOR REFERENCE AND ARE NOT MARKED ON COMPONENT.

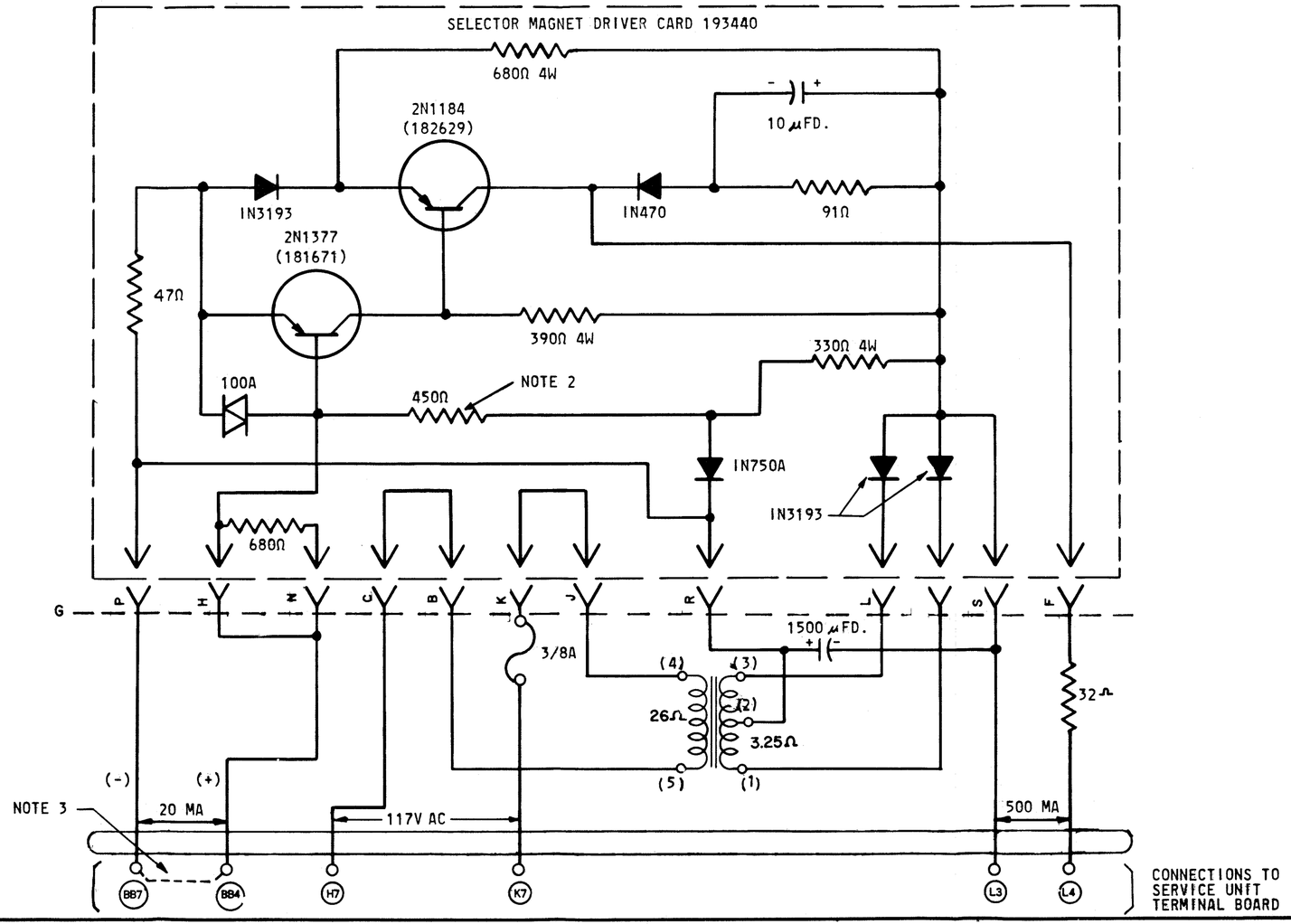

5949WD

ISSUE	DATE	AUTH. NO.
2	8-6-64	83021

SELECTOR MAGNET
DRIVER ASSEMBLY
193400
USED ON
194605
SERVICE UNIT
ASSEMBLY

APPROVALS	
D AND R	E OF M
E-NUMBER	
PROD. NO. 5949WD	
DATE: 8-25-62	
P.D. FILE NO. 3-95AAA	
DRAWN. G.M.	CHKD.
ENGD. P.H.B.	APPD.

TELETYPE CORPORATION

5949WD

NOTES	
1.	REFER TO 6022 WD FOR ACTUAL WD.
2.	"TB" NUMBERS INDICATE CONNECTIONS TO TERMINAL BOARD IN 194605 SERVICE UNIT ASSEMBLY
3.	⟩— INDICATES FEMALE AND —⟩ INDICATES MALE TERMINALS
4.	ALL VOLTAGES DC UNLESS OTHERWISE SPECIFIED

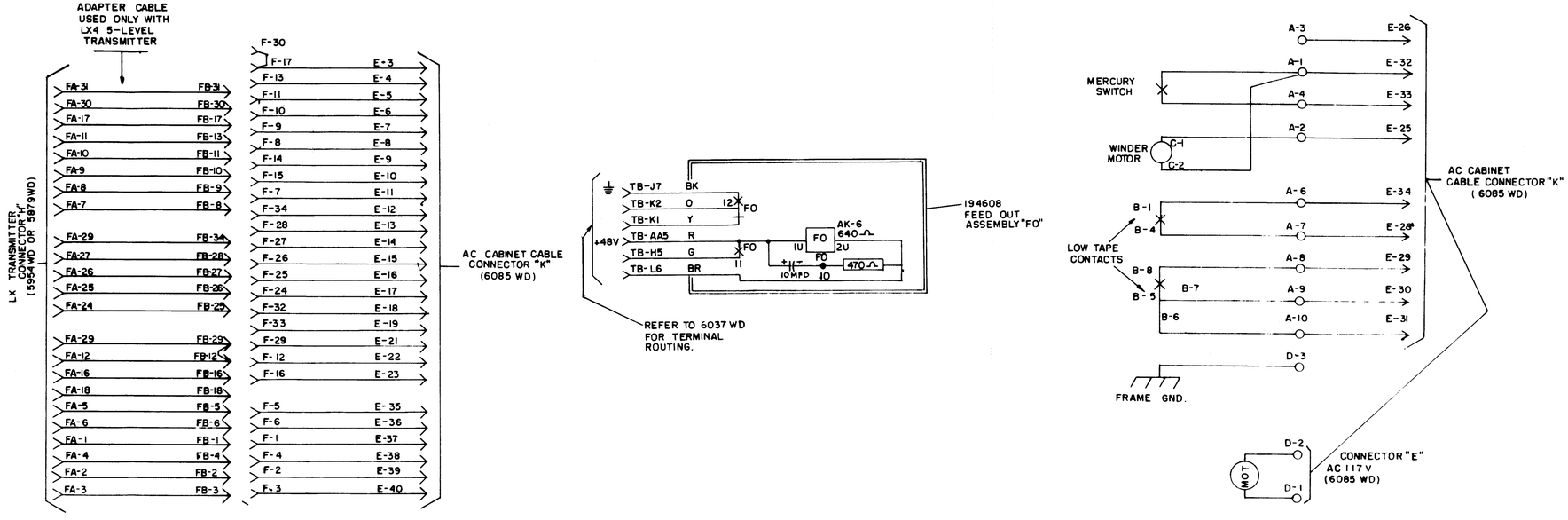

6021 WD

REVISIONS		
ISSUE	DATE	AUTH. NO.
2	7-9-64	82984
3	7-10-64	83009

SCHEMATIC WIRING DIAGRAM FOR TAPE TO TAPE PANEL ASSEMBLY VCL 283 AND VCL 316 ASSEMBLY NO. 194548

APPROVALS	
R AND D	E OF M
E NUMBER	
PROD. NO. 6021 WD	
DATE 2-1-63	
R. & D. FILE NO. 3-95AAA	
DRAWN R.A.L.	CHKD.
ENGD. P.H.B.	APPD.

TELETYPE CORPORATION

6021 WD

TC478

NO	NOTES
1	FOR WIRING LIST REFER TO 6024 WD
2	ADD STRAP ACROSS DD5 AND BB6 TO DISABLE BLINDING CIRCUIT
3	ADD STRAP ACROSS AA2 AND J7 TO RUN MOTOR CONTINUOUSLY
4	ADD STRAP ACROSS CC7 AND DD7 TO DISABLE LINE BREAK KEY
5	ADD STRAP ACROSS CC4 AND DD4 WHEN CONVERTER IS USED AS A SIGNAL-TO-TAPE TRANSLATOR
6	STRAP TB-K5 TO TB-K6 WHEN AUTOMATIC LTRS FEED-OUT IS REQUIRED FOR TAPE-TO-TAPE CON'ERTERS. REMOVE CONNECTION TO CONTACT 1 UB AND TIE BACK.
7	CIRCUIT IS WIRED FOR STUNT-BOX CONTROL OF FEED-OUT RELAY, FO, THROUGH UNBLIND RELAY, "UB," IF EXTERNAL CONTROL IS DESIRED. DIS-CONNECT LEAD BETWEEN TB-K6 AND TB-AA7 AND CON-NECT EXTERNAL CONTACT TO TERMINALS.
8	⟩— INDICATES FEMALE AND —⟩ INDICATES MALE TER-MINALS.
9	DESIGNATIONS (6) AND (7) ARE USED FOR THE 5-8 LEVEL CODE CONVERTER.
10	5-8 LEVEL CONVERTER IS WIRED FOR VERTICAL PARITY. IF CONTINUOUS MARK IS DESIRED IN THE 8TH LEVEL, REMOVE STRAP FROM TB-AA1 AND CONNECT TO TB-BB5.

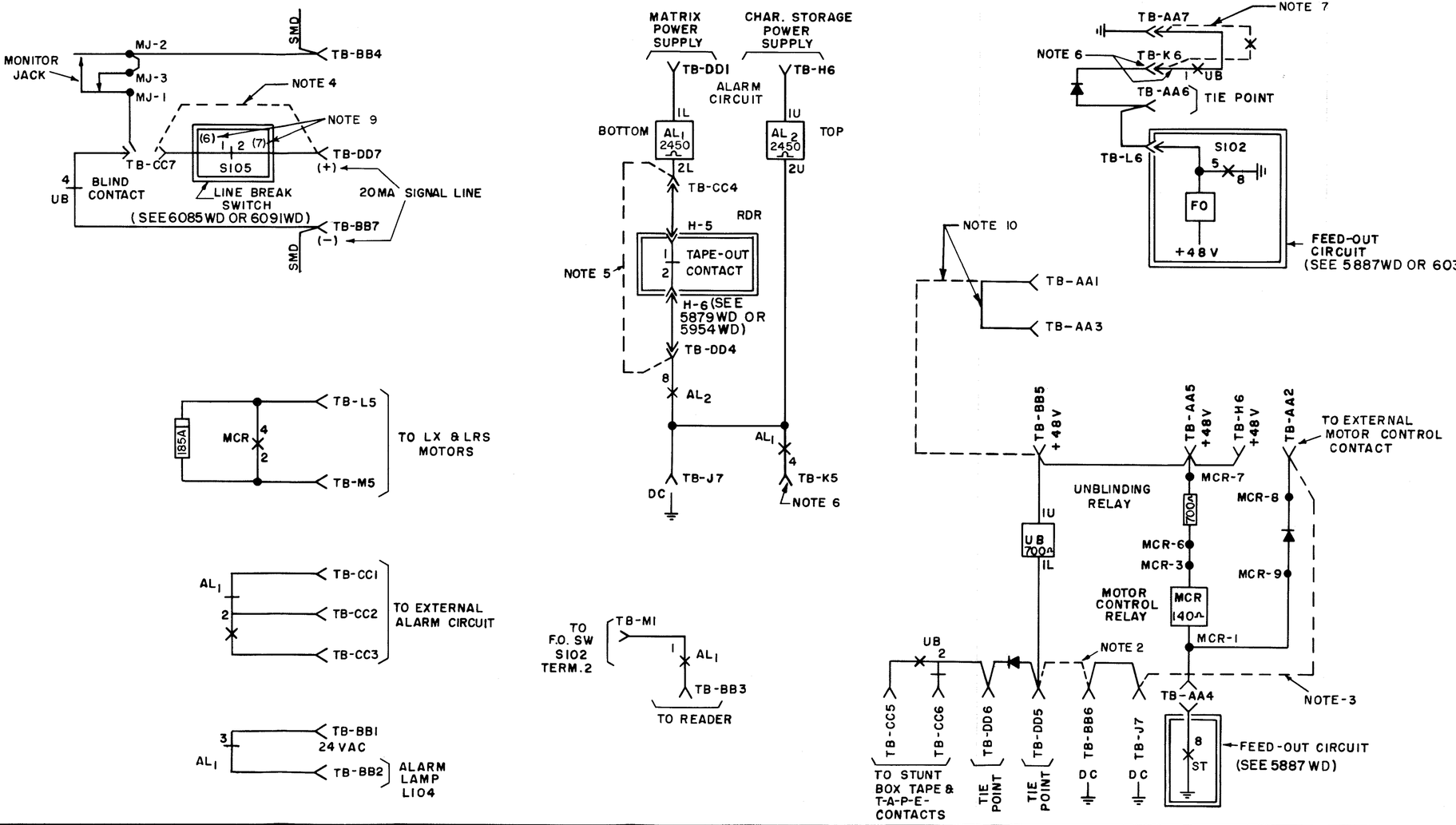

6023WD

ISSUE	DATE	AUTH. NO.
2	9-24-63	78176
3	7-10-64	82990

SCHEMATIC WIRING DIAGRAM

194605 SERVICE UNIT ASSEMBLY

APPROVALS	
D AND R	E OF M
E-NUMBER	
PROD. NO 6023 WD	
DATE 1-17-63	
P.D. FILE NO 3-95 AAA	
DRAWN C G	CHKD.
ENGD PHB	APPD

TELETYPE CORPORATION

6023WD

NO.	NOTES
1.	FOR ACTUAL WD REFER TO 6038 WD.
2.	"TB" NUMBERS INDICATE CONNECTIONS TO TERMINAL BOARD IN 194605 SERVICE UNIT ASSEMBLY. REFER TO 6021WD
3.	ALL VOLTAGES DC UNLESS OTHERWISE SPECIFIED.
4.	INDICATES FEMALE TERMINAL.
5.	ALL CAPACITANCE VALUES IN MICROFARADS UNLESS OTHERWISE SPECIFIED.

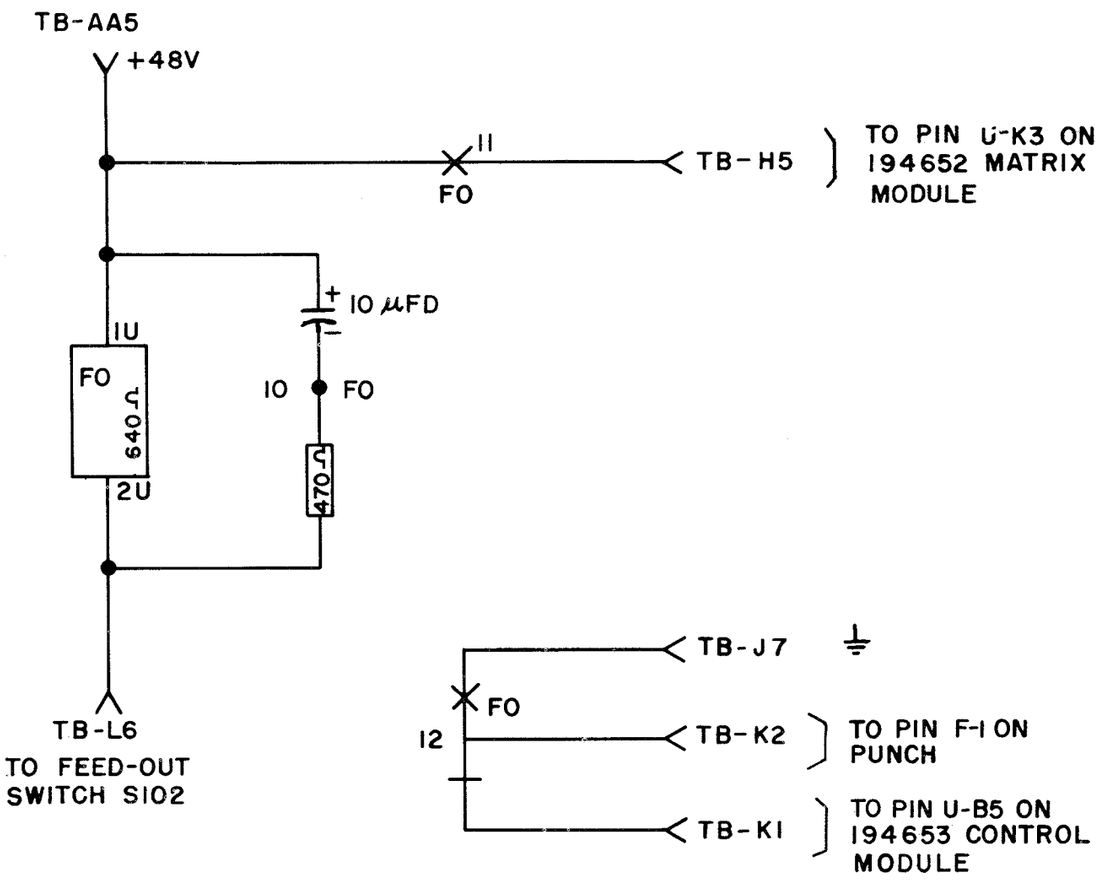

6037 WD

ISSUE	DATE	AUTH. NO.
2	7-30-64	83012

SCHEMATIC WIRING DIAGRAM

194608 FEED - OUT ASSEMBLY

APPROVALS

D AND R	E OF M

E-NUMBER

PROD. NO. 6037 WD

DATE: 1 - 3 - 63

P.D. FILE NO. 3-95AAA

DRAWN. C.A. CHKD.

ENGD. PHB APPD.

TELETYPE CORPORATION

6037WD

ET108147
TC255(6-54)

NO	NOTES
1	REFER TO 6081WD FOR SCHEMATIC OF TRANSFER TREE RELAYS
2	REFER TO 6082WD FOR WIRING LIST
3	ADD STRAP ACROSS THESE TERMINALS TO DISABLE UNSHIFT ON SPACE FEATURE
4	ALL VOLTAGES DC UNLESS OTHERWISE SPECIFIED
5	>—— INDICATES FEMALE AND —>> INDICATES MALE TERMINALS

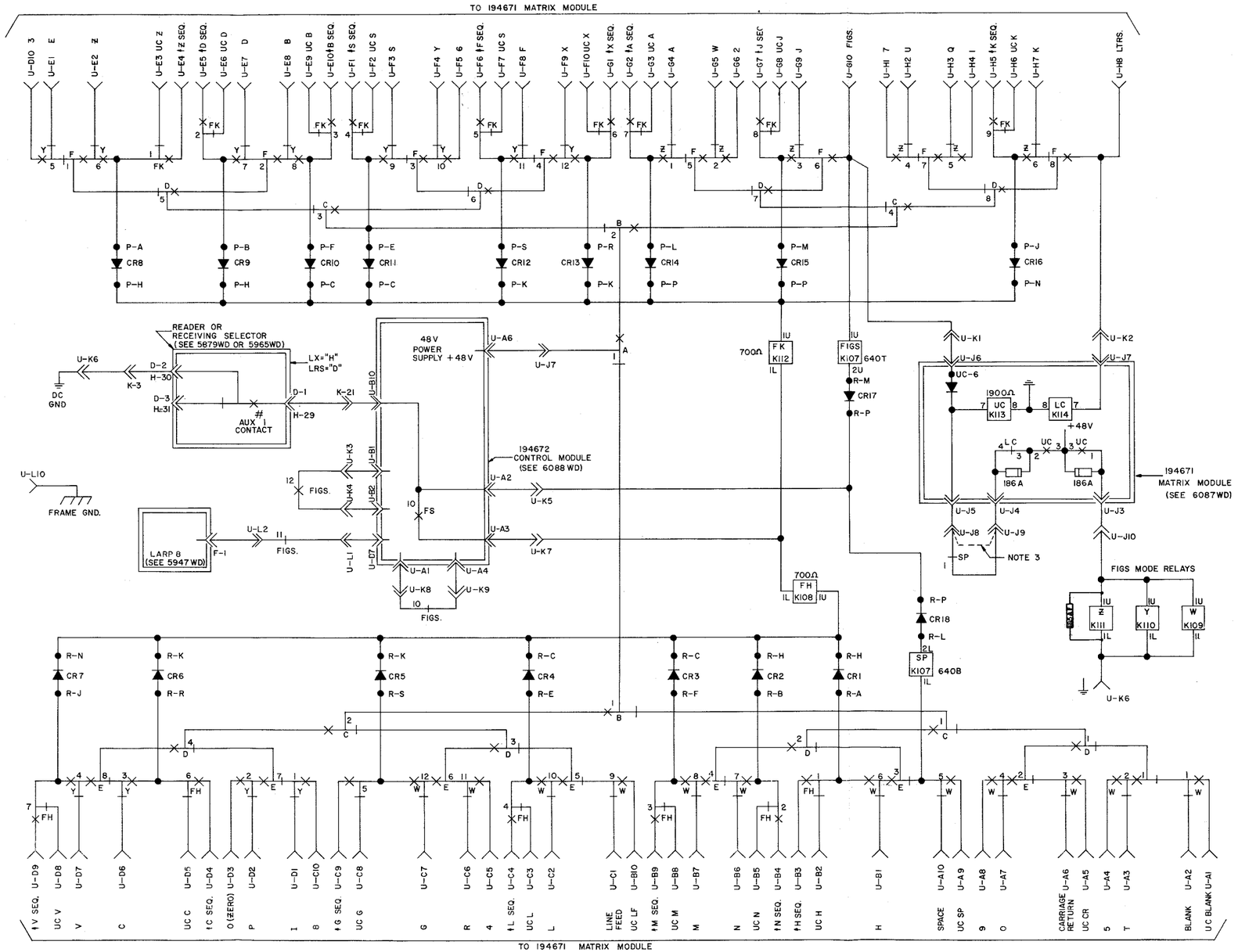

6039WD

ISSUE	DATE	AUTH NO
1	9-24-63	78176
2	7-9-64	82992
3	10-23-64	83877

SCHEMATIC
5 TO 8 LEVEL
TRANSFER TREE
MODULE
194670

APPROVALS

D AND R	E OF M

E-NUMBER

PROD. NO. 6039 WD

DATE: 2-16-63

P.D. FILE NO. 4.95 AAA

DRAWN CG | CHKD. RJK.

ENGD. PHB | APPD. RGG.

TELETYPE CORPORATION

6039WD

NO.	NOTE
1.	REFER TO 6039 W.D. FOR TRANSFER TREE MAZE CONTACTS.
2.	REFER TO 6082 W.D. FOR WIRING LIST.
3.	ALL VOLTAGES DC UNLESS OTHERWISE SPECIFIED.
4.	>—— INDICATES FEMALE AND —> INDICATES MALE TERMINALS.

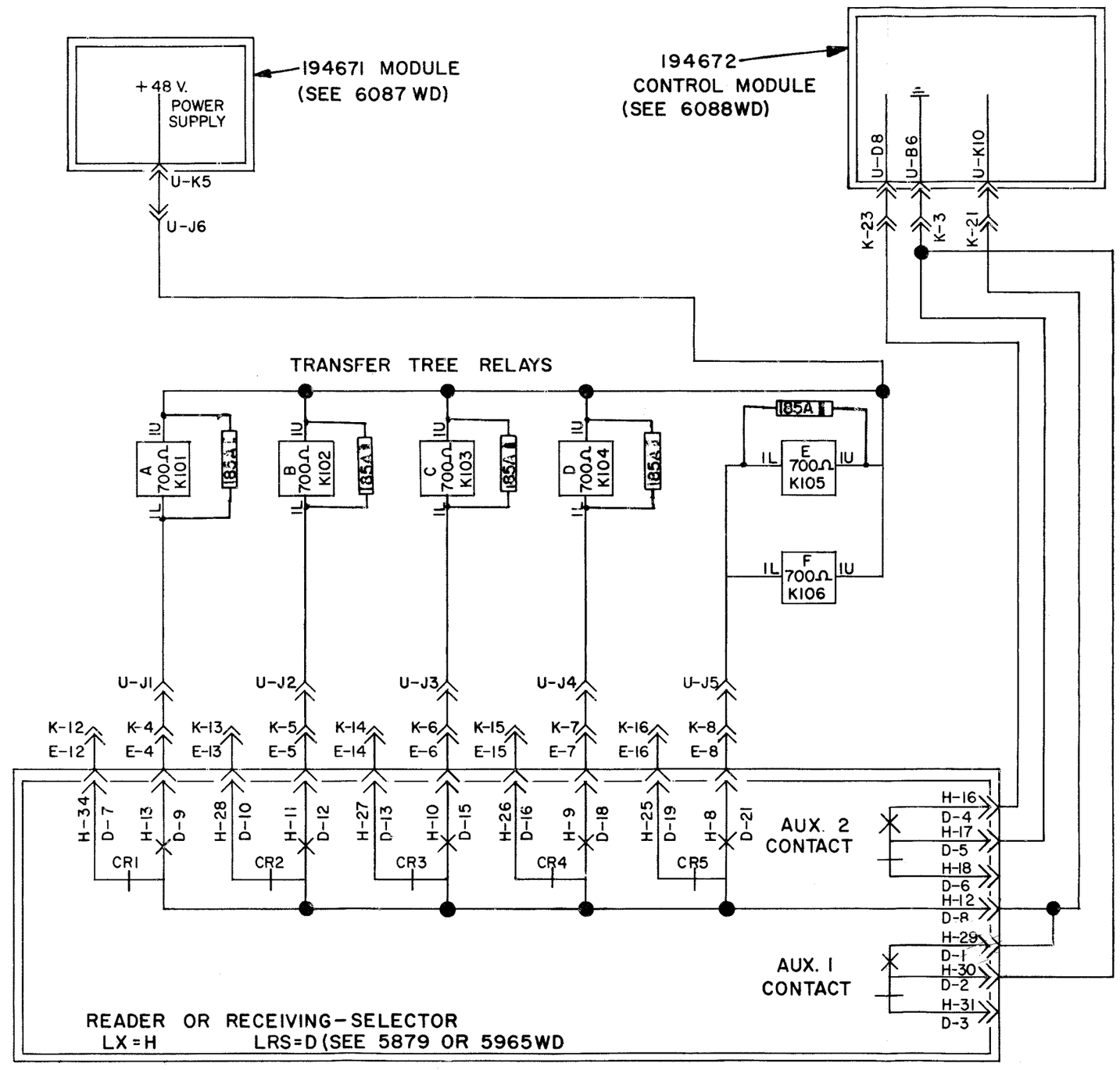

6081 WD

ISSUE	DATE	AUTH. NO.
2	9-24-63	78176
3	7-9-64	82992
4	10-23-64	83877

SCHEMATIC
5 TO 8 LEVEL
TRANSFER TREE
MODULE 194670

APPROVALS

D AND R	E OF M
RJK	

E-NUMBER

PROD. NO. 6081WD

DATE: 2-14-63

P.D. FILE NO. 4-95. AAA

DRAWN	CHKD RJK
ENGD	APPD RGG

TELETYPE CORPORATION

6081 WD

NO.	NOTES
1.	REFER TO 6084 WD FOR ACTUAL WD.
2.	THIS STRAP IS NOT PART OF THE 194698 CABLE ASSEMBLY BUT MUST BE ADDED WHEN THE CABLE IS USED AS PART OF THE VCL 317 ASSEMBLY.
3.	⟩— INDICATES FEMALE AND —⟩ INDICATES MALE TERMINALS.
4.	ALL VOLTAGES DC UNLESS OTHERWISE SPECIFIED.

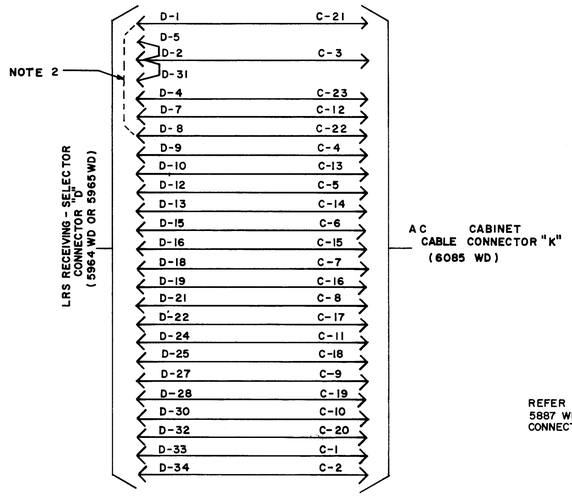

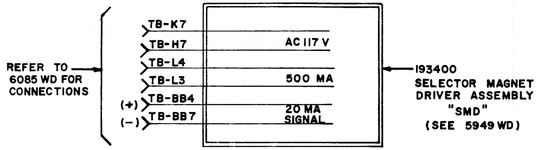

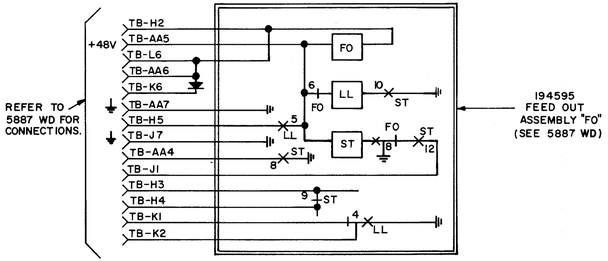

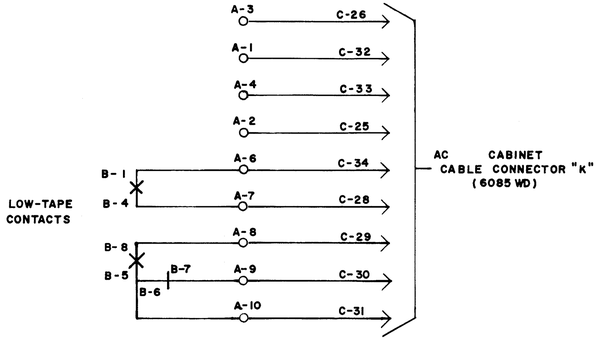

6083 WD

REVISIONS

ISSUE	DATE	AUTH. NO.
2	9-24-63	78176
3	7-10-64	82985

SCHEMATIC WIRING DIAGRAM

FOR SIGNAL TO TAPE PANEL ASSEMBLY VCL 282 AND VCL 317

193400, 194595, AND 194706 ASSEMBLIES

APPROVALS

R AND D	E OF M

E-NUMBER

PROD. NO. 6083 WD

DATE: 2-2-63

R. & D. FILE NO. 3-95AAA

DRAWN C.G. CHKD.

ENGD. R.J.K. APPD. RGG

TELETYPE CORPORATION

6083 WD

TC478

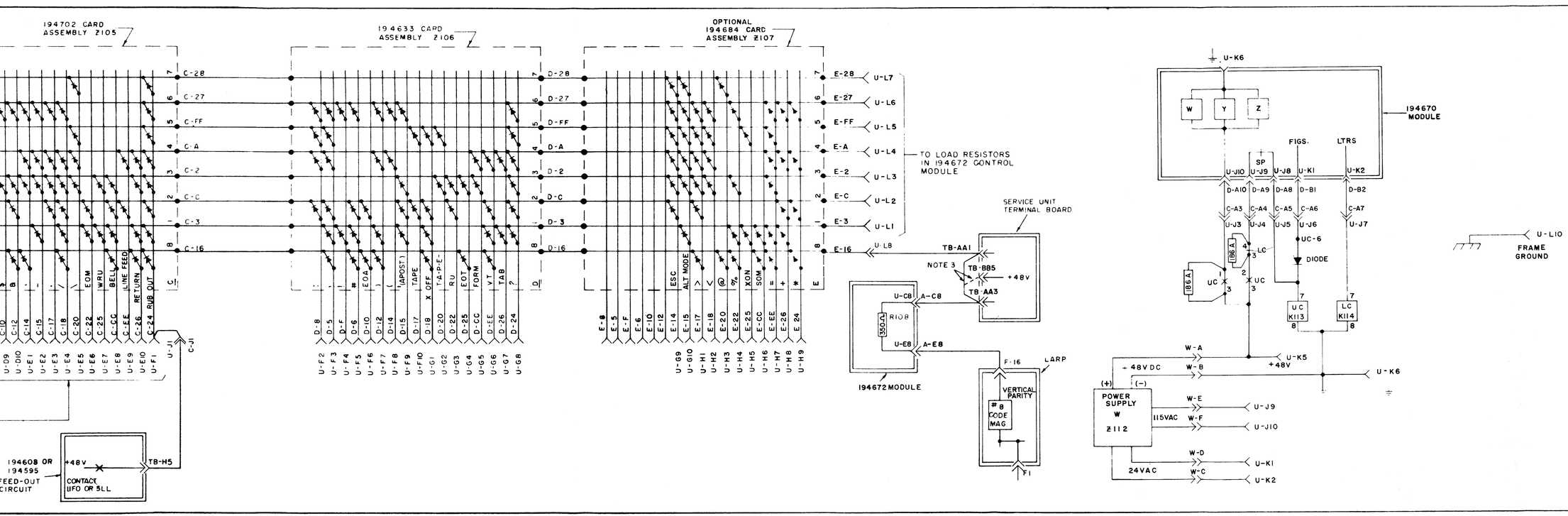

6087 WD		
ISSUE	DATE	AUTH. NO.
2	7-7-64	82995

SCHEMATIC WIRING DIAGRAM

5 TO 8 LEVEL CODE CONVERTER 194671 DIODE MATRIX ASSEMBLY

APPROVALS	
D AND R	E OF M

E-NUMBER

PROD. NO. 6087 WD

DATE 2-25-63

PO FILE NO. 4-95AAA

DRAWN CG | CHKD.

ENGD. PHB | APPD.

TELETYPE CORPORATION

6087 WD

NO	NOTES
1.	REFER TO 6086WD FOR WIRING LIST
2	A-E CONNECTOR (56 PIN) (J103 - J107) 193033 U CONNECTOR (110 PIN) (J115) 174732
3	CONVERTER IS STRAPPED BETWEEN TB-AA1 AND TB-AA3 TO PRODUCE A VERTICAL PARITY BIT IN THE 8TH LEVEL. IF CONTINUOUS MARKING IS DESIRED, REMOVE STRAP FROM TB-AA1 AND CONNECT TO TB-BB5
4.	ALL VOLTAGES DC UNLESS OTHERWISE SPECIFIED.
5.	>— INDICATES FEMALE AND —> INDICATES MALE TERMINALS.

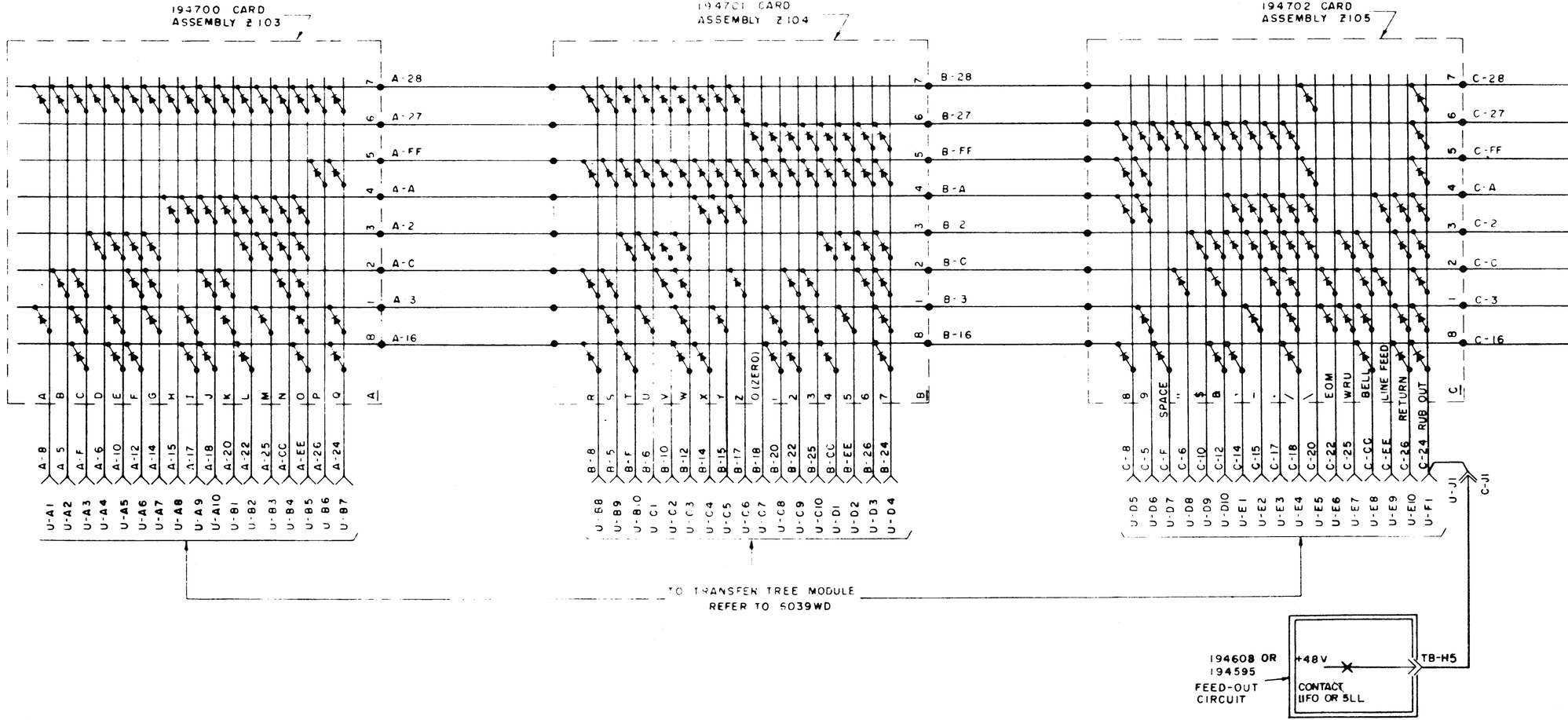

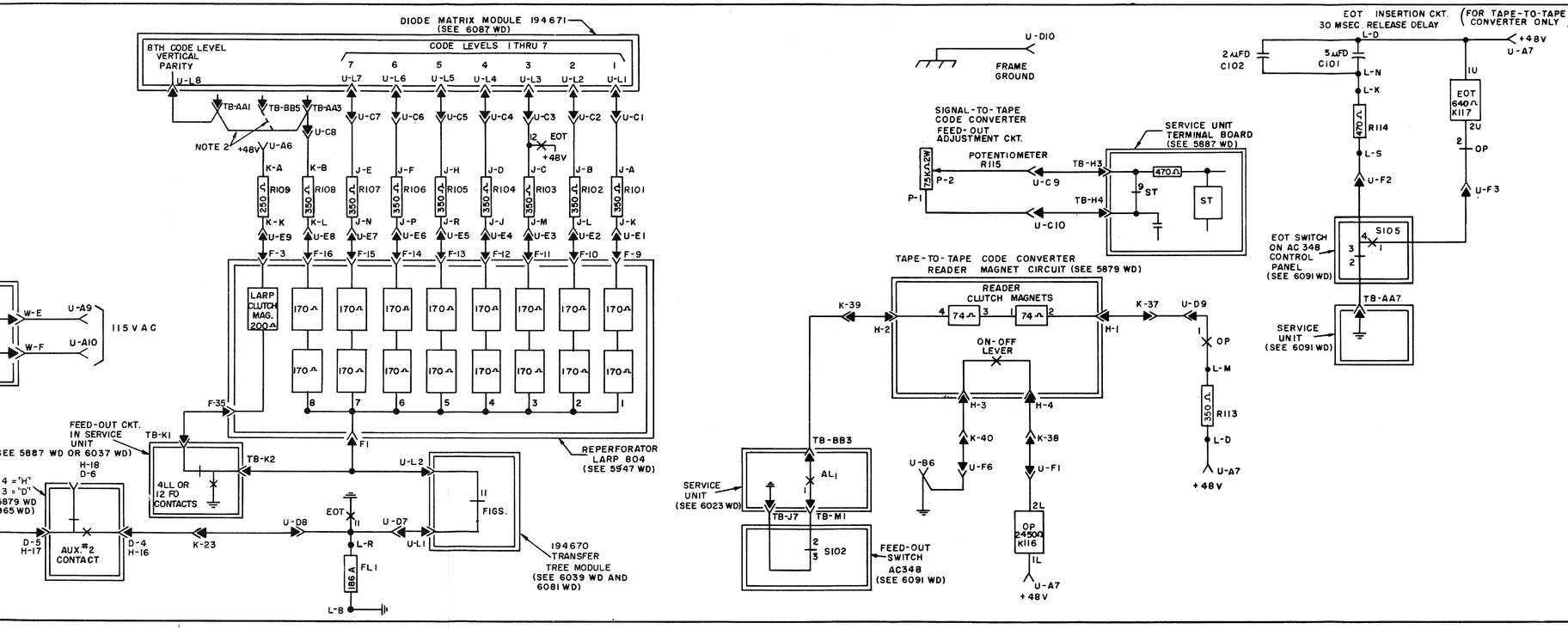

6088 WD

ISSUE	DATE	AUTH. NO.
2	7-25-55	73 [illegible]
3	10-24-63	78176
4	8-6-64	82239

SCHEMATIC WIRING DIAGRAM

194672 CONTROL MODULE 5 TO 8 LEVEL CODE CONVERTER

APPROVALS

D AND B	E OF M
[illegible]	[illegible]

E-NUMBER

PROD. NO 6088 WD

DATE 3-2-63

P.D. FILE NO. 4-95 AAA

DRAWN CG CHKD [illegible]

ENGD. PHB APPD [illegible]

TELETYPE CORPORATION

6088 WD

NO	NOTES
1	REFER TO 6089WD FOR WIRING LIST
2	CONVERTER IS WIRED FOR VERTICAL PARITY. IF CONTINUOUS MARKING IS DESIRED IN THE 8TH LEVEL, REMOVE STRAP FROM TB-AA1 AND CONNECT TO TB-BB5
3.	ALL VOLTAGES DC UNLESS OTHERWISE SPECIFIED.
4.	ALL CAPACITANCE VALUES IN MICROFARADS, UNLESS OTHERWISE SPECIFIED.
5.	INDICATES FEMALE TERMINAL INDICATES MALE TERMINAL

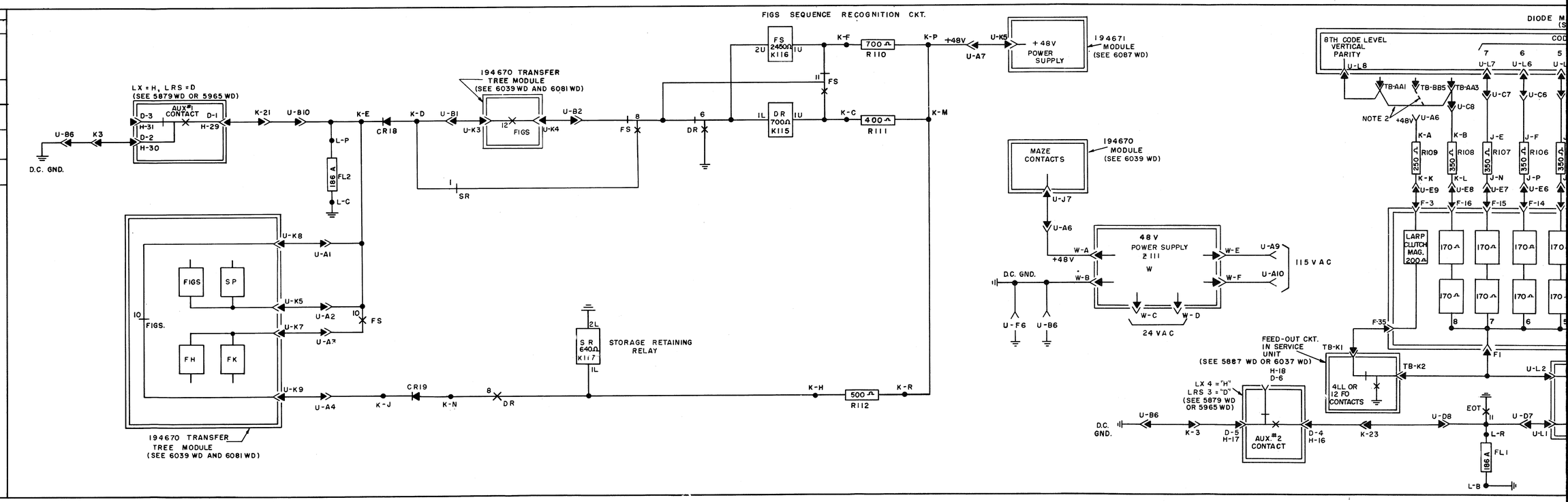

NO.	NOTES
1.	FOR WIRING LIST, REFER TO 6090WD.
2.	"A" CONNECTOR IS ON 194672 CONTROL MODULE, 6088WD. "C" CONNECTOR IS ON 194671 DIODE MATRIX MODULE, 6087WD. "D" CONNECTOR IS ON 194670 TRANSFER TREE MODULE, 6039WD, 6081WD.
3.	ADD STRAP ACROSS TB-AA2 & TB-J7 TO RUN MOTOR CONTINUOUSLY.
4.	ADD STRAP ACROSS TB-CC7 & TB-D7 TO DISABLE LINE BREAK KEY.
5.	ADD STRAP ACROSS TB-CC4 & TB-DD4 WHEN CONVERTER IS USED AS A SIGNAL-TO-TAPE TRANSLATOR.
6.	ADD STRAP ACROSS TB-DD5 & TB-BB6 TO DISABLE BLINDING CIRCUIT.
7.	"TB" CONNECTIONS SHOWN ON 6023WD.
8.	"F" CONNECTIONS SHOWN ON 5947WD.
9.	"K" CONNECTIONS SHOWN ON 6021WD.
10.	CIRCUIT IS WIRED FOR STUNT-BOX CONTROL OF FEED-OUT RELAY, "FO", THROUGH UNBLIND RELAY, "UB". IF EXTERNAL CONTROL IS DESIRED, DISCONNECT LEAD BETWEEN TB-K6 AND TB-AA7 AND CONNECT EXTERNAL CONTACT TO TERMINALS.
11.	CONVERTER IS WIRED FOR VERTICAL PARITY. IF CONTINUOUS MARK IS DESIRED IN THE 8TH LEVEL, REMOVE STRAP FROM TB-AA1 AND CONNECT TO TB-BB5.
12.	STRAP TB-K5 TO TB-K6 WHEN AUTOMATIC LTRS. FEED-OUT IS REQUIRED FOR TAPE-TO-TAPE CONVERTERS AND REPLACE 194608 MANUAL FEED-OUT ASSEMBLY WITH 194595 AUTOMATIC FEED-OUT ASSEMBLY. REMOVE CONNECTION TO CONTACT 1 UB AND TIE BACK.
13.	DISCONNECT S-105-2 LEAD AT TB-AA7 AND TAPE IN SIGNAL-TO-TAPE APPLICATION.
14.	ALL VOLTAGES DC UNLESS OTHERWISE SPECIFIED.
15.	TERMINAL DESIGNATIONS ENCLOSED IN PARENTHESES ARE FOR REFERENCE AND ARE NOT MARKED ON COMPONENT.
16.	
17.	—< INDICATES FEMALE AND —► INDICATES MALE TERMINALS.

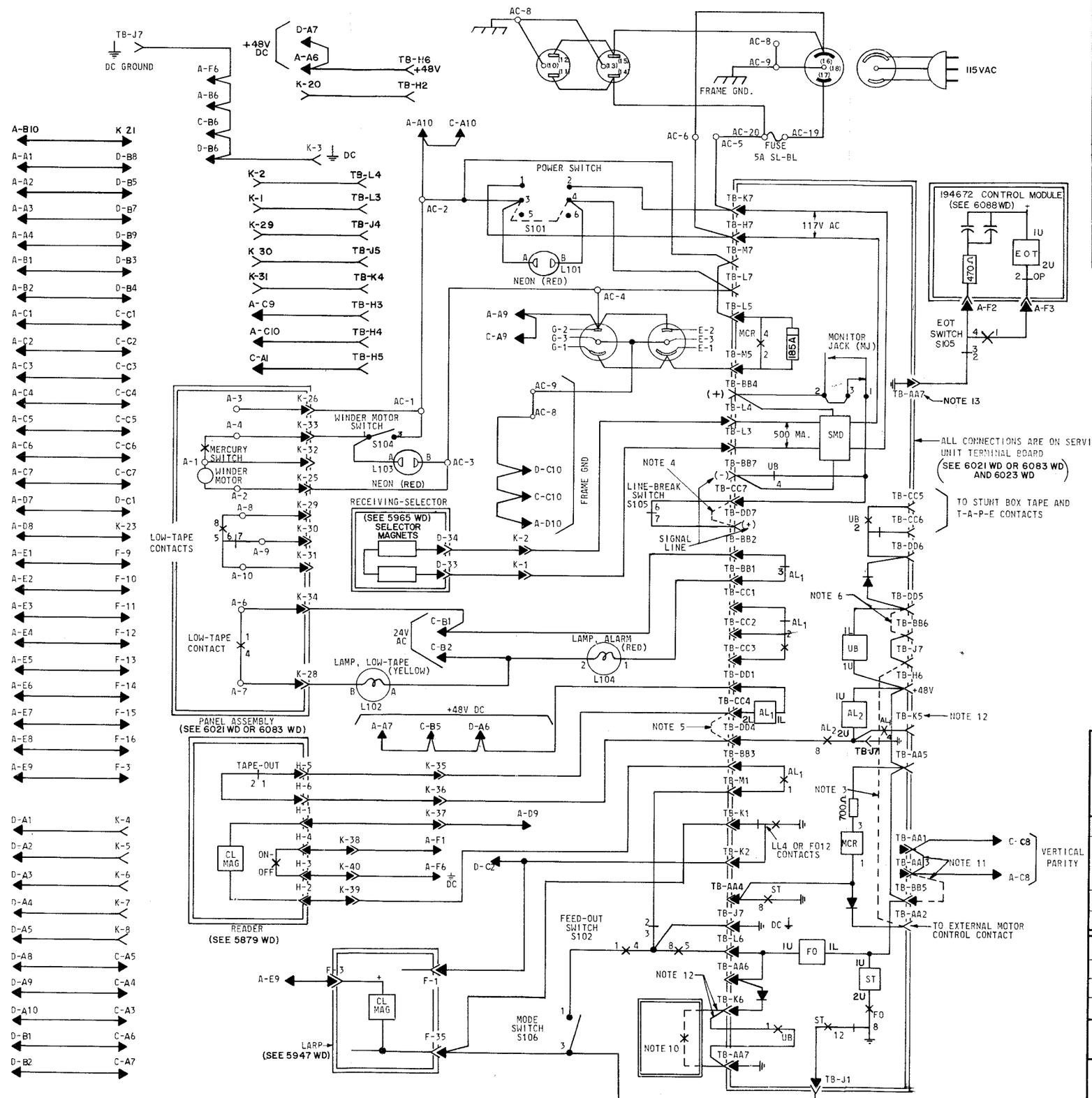

6091 WD

ISSUE	DATE	AUTH. NO.
A 2	5-22-63	76489
B 3	9-4-63	77405
C 4	9-5-63	77874
D 5	9-23-63	78176
E 6	12-12-63	77435
7	6-9-64	82051
8	8-3-64	83000
9	9-1-64	83054

SCHEMATIC
WIRING DIAGRAM
AC348
5 TO 8 LEVEL CODE
CONVERTER CABINET

APPROVALS	
D AND R	E OF M

E-NUMBER

PROD. NO. 6091WD

DATE: 3-4-63

P.D. FILE NO. 4-95AAA

DRAWN C.G. CHKD.

ENGD. P.H.B. APPD.

TELETYPE CORPORATION

6091 WD

EFH

NO.	NOTES
1.	FOR WIRING LIST REFER TO 6090WD.
2.	FOR TRANSLATION SCHEMATIC REFER TO 6365 WD.
3.	ALL VOLTAGES DC UNLESS OTHERWISE SPECIFIED.
4.	TERMINAL DESIGNATIONS ENCLOSED IN PARENTHESES ARE FOR REFERENCE AND ARE NOT MARKED ON COMPONENTS.
5.	INDICATES FEMALE AND INDICATES MALE TERMINALS.

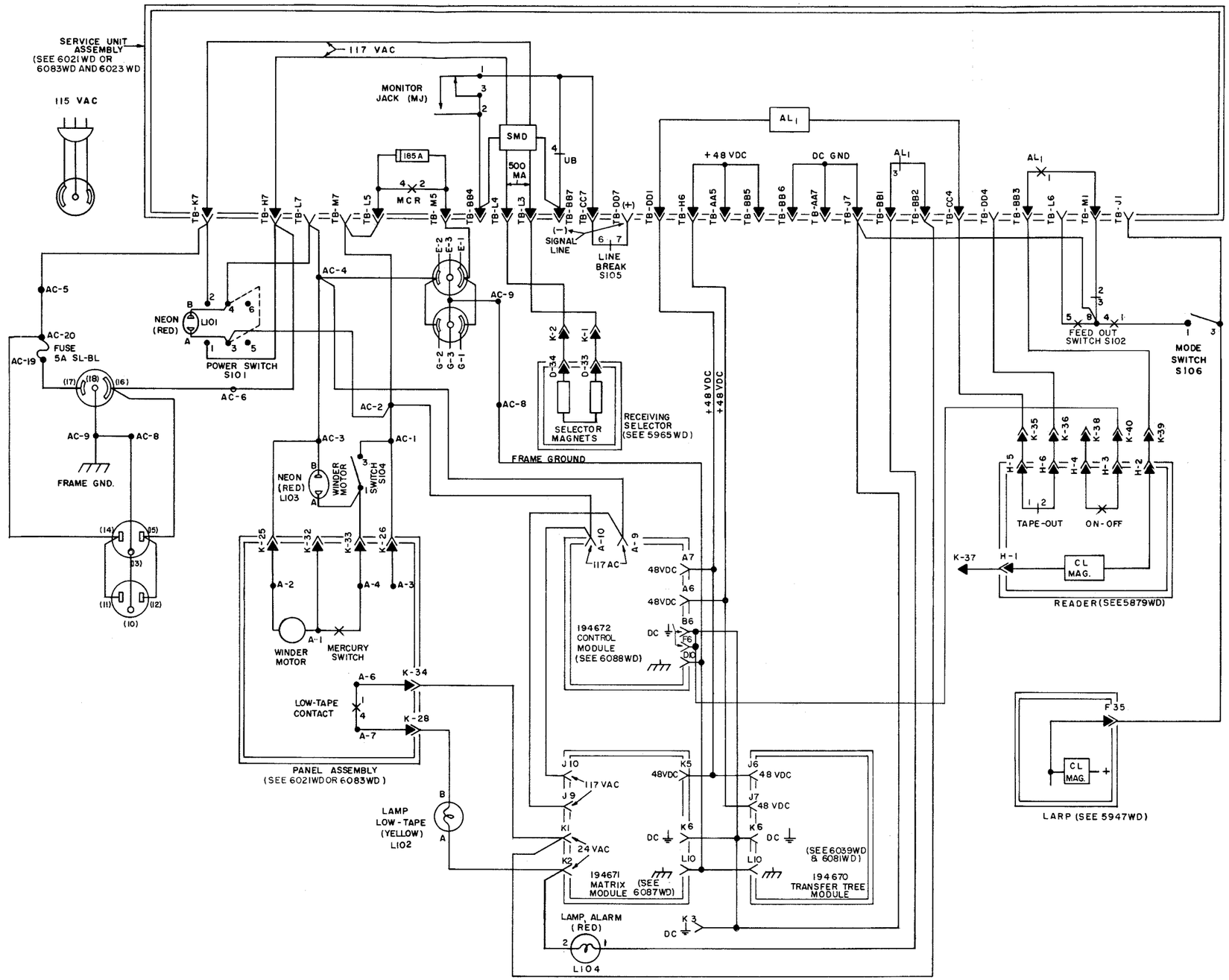

6364WD

ISSUE	DATE	AUTH. NO.
2	9-24-63	78176
3	12-12-63	77436
4	7-31-64	83005

POWER SCHEMATIC OF 5 TO 8 LEVEL CODE CONVERTER

APPROVALS

D AND R	E OF M

E-NUMBER

PROD. NO. 6364 WD

DATE: 3-16-63

P.D. FILE NO. 4-95AAA

DRAWN CG | CHKD.

ENGD. RJK | APPD.

TELETYPE CORPORATION

6364WD

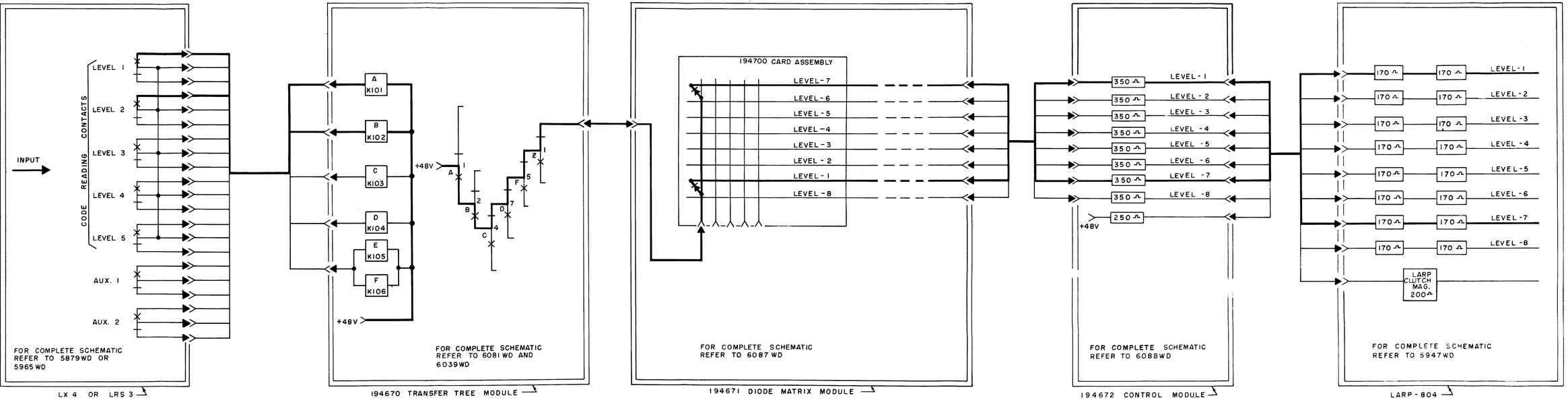

6365 WD

ISSUE	DATE	AUTH. NO.

TRANSLATION SCHEMATIC OF 5-TO-8 LEVEL CODE CONVERTER

APPROVALS	
D AND R	E OF M
E-NUMBER	
PROD. NO. 6365WD	
DATE 3-19-63	
P.D. FILE NO.	
DRAWN CG	CHKD.
ENGD. RJK	APPD.

TELETYPE CORPORATION

6365 WD

NO.	NOTES
1.	REFER TO 6090WD AND 6367WD FOR WIRING INFORMATION.

6366WD		
ISSUE	DATE	AUTH. NO.
A	12-12-63	77435

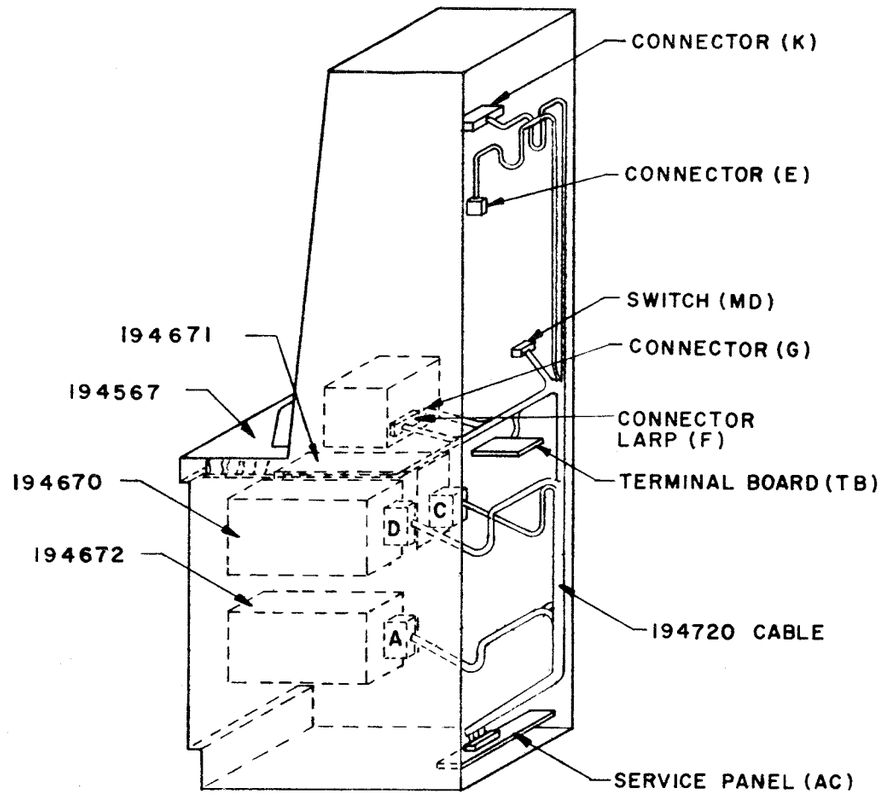

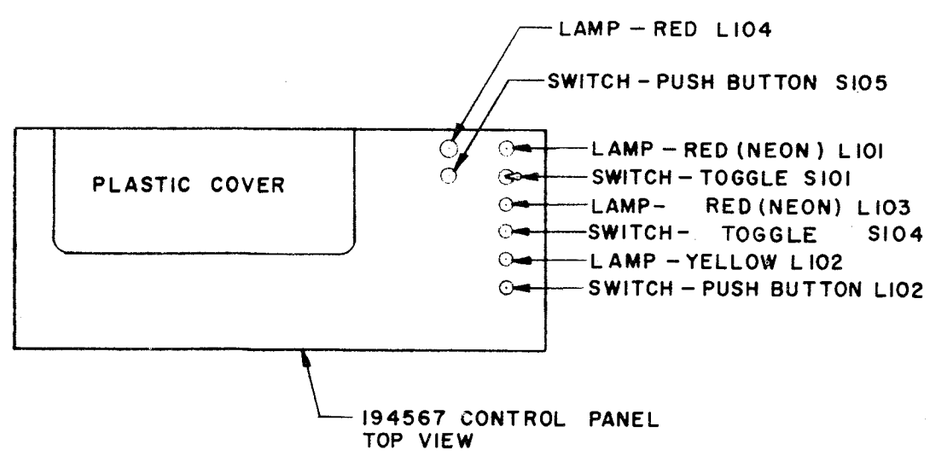

CABLE ROUTING

AC 348

APPROVALS	
D AND R	E OF M
E-NUMBER	
PROD. NO. 6366WD	
DATE 5-21-63	
P.D. FILE NO. 4-95 AAA	
DRAWN. J.V.K.	CHKD.
ENGD. R.J.K	APPD.

TELETYPE CORPORATION

6366WD

ET 100147
TC255 (6-54)

NO.	NOTES
1.	IN 194692 CONNECTOR, THE SYMBOLS θ, □, ‡, ✳, ϕ, Δ, Σ, Ψ, Γ, ⋈, #, ◊, ⊠ INDICATES STRAPS BETWEEN TERMINALS MARKED WITH LIKE SYMBOLS.
2.	ANY CODE ALTERATIONS ARE TO BE MADE IN THE 194692 CONNECTOR.
3.	COLOR CODE IDENTIFICATION:

W - WHITE P - PURPLE
BK - BLACK G - GREEN
O - ORANGE R - RED
BL - BLUE S - SLATE
Y - YELLOW BR - BROWN

W-BK - WHITE-BLACK
W-O - WHITE-ORANGE
W-BL - WHITE-BLUE
W-Y - WHITE-YELLOW
W-P - WHITE-PURPLE
W-G - WHITE-GREEN
W-R - WHITE-RED
W-S - WHITE-SLATE
W-BR - WHITE-BROWN
Y-G - YELLOW-GREEN
BK-Y - BLACK-YELLOW
R-BL - RED-BLUE
R-G - RED-GREEN
R-Y - RED-YELLOW
BR-BL - BROWN-BLUE
BR-G - BROWN-GREEN
BR-Y - BROWN-YELLOW
BK-BL - BLACK-BLUE
BK-G - BLACK-GREEN
BK-R - BLACK-RED
R-O - RED-ORANGE
R-S - RED-SLATE
R-BR - RED-BROWN
O-G - ORANGE-GREEN
O-S - ORANGE-SLATE
O-BR - ORANGE-BROWN
BK-S - BLACK-SLATE
BK-BR - BLACK-BROWN
BL-S - BLUE-SLATE
BL-G - BLUE-GREEN
G-S - GREEN-SLATE
BR-S - BROWN-SLATE

W-BK-R - WHITE-BLACK-RED
W-O-G - WHITE-ORANGE-GREEN
W-O-BL - WHITE-ORANGE-BLUE
W-BK-O - WHITE-BLACK-ORANGE
W-BK-P - WHITE-BLACK-PURPLE
W-BK-G - WHITE-BLACK-GREEN
W-R-G - WHITE-RED-GREEN
W-R-Y - WHITE-RED-YELLOW
W-O-BR - WHITE-ORANGE-BROWN
BK-O - BLACK-ORANGE
W-R-BK - WHITE-RED-BLACK
W-R-P - WHITE-RED-PURPLE

W-G-BL - WHITE-GREEN-BLUE
W-G-BR - WHITE-GREEN-BROWN
W-G-P - WHITE-GREEN-PURPLE
W-G-R - WHITE-GREEN-RED
W-G-BK - WHITE-GREEN-BLACK
W-BL-R - WHITE-BLUE-RED
W-BL-G - WHITE-BLUE-GREEN
W-P-BL - WHITE-PURPLE-BLUE
W-BL-BK - WHITE-BLUE-BLACK
W-BL-BR - WHITE-BLUE-BROWN
W-BL-P - WHITE-BLUE-PURPLE
W-BR-BK - WHITE-BROWN-BLACK
W-BR-P - WHITE-BROWN-PURPLE
W-P-R - WHITE-PURPLE-RED
Y-BR - YELLOW-BROWN
Y-O - YELLOW-ORANGE
Y-P - YELLOW-PURPLE
S-BK - SLATE-BLACK
S-BR - SLATE-BROWN
S-O - SLATE-ORANGE
S-Y - SLATE-YELLOW
S-G - SLATE-GREEN
S-BL - SLATE-BLUE
S-P - SLATE-PURPLE
O-BL - ORANGE-BLUE

NO.	NOTES
4.	TERMINAL DESIGNATIONS ENCLOSED IN PARENTHESES ARE FOR REFERENCE AND ARE NOT MARKED ON COMPONENT.

194670 TRANSFER TREE END OF CABLE

	(10)	(9)	(8)	(7)	(6)	(5)	(4)	(3)	(2)	(1)
(A)	SP BK-S ‡	UC-SP ‡	9 O-BR	O W-P	CR W-R-Y□	UC-CR □	5 R-S	T Y-G	BLANK θ	UC-BLANK θ
(B)	UC-LF Δ	FIGS-M ϕ	UC-M ϕ W-BK-R	M W-BL	N W-Y	UC-N ✳ W-O-BL	FIGS-N ✳	FIGS-H W-BK-O	UC-H ✳	H R
(C)	8 O-S	FIGS-G Σ	UC-G BL-G Σ	G G	R W-S	4 R-O	FIGS-L ✳	UC-L ✳	L W-O	LF Δ W-R-G
(D)	3 BK-R	FIGS-V ✳	UC-V ✳	V R-BL	C O	UC-C ✳	FIGS-C W-BK-P	O (Ø ZERO) BR-Y	P W-G	I S
(E)	FIGS-B ✳	UC-B ✳	B BK	D BL	UC-D BL-S Γ	FIGS-D Γ	FIGS-Z Ψ	UC-Z BK-BR Ψ	Z BR-G	E Y
(F)	UC-X W-O-G ✳	X R-Y	F P	UC-F ✳	FIGS-F ✳	6 R-BR	Y BR-BL	S W-BR	UC-S ⋈ W-BK-G	FIGS-S ⋈
(G)	FIGS	J BR	UC-J G-S ⊠	FIGS-J ⊠	2 BK-G	W R-G	A W	UC-A BR-S ◊	FIGS-A ◊	FIGS-X #
(H)			LTRS W-O-BR	K W-BK	UC-K ✳	FIGS-K ✳	I BK-BL	Q W-R	U BK-Y	7 O-G

WIRING SIDE OF 194692 CONNECTOR

194671 DIODE MATRIX END OF CABLE

	(10)	(9)	(8)	(7)	(6)	(5)	(4)	(3)	(2)	(1)
(A)	J BR	I S	H R	G G	F P	E Y	D BL	C O	B BK	A W
(B)	T Y-G	S W-BR	R W-S	Q W-R	P W-G	O W-P	N W-Y	M W-BL	L W-O	K W-BK
(C)	3 BK-R	2 BK-G	1 BK-BL	O (Ø ZERO) BR-Y	Z BR-G	Y BR-BL	X R-Y	W R-G	V R-BL	U BK-Y
(D)	8 BL-G	$ BL-S	" (QUOTES) BK-BR	SP BK-S	9 O-BR	8 O-S	7 O-G	6 R-BR	5 R-S	4 R-O
(E)	CR W-R-Y	LF W-R-G	BELL W-BK-G	WRU W-BK-P	EOM W-BK-O	\ W-O-BL	/ W-O-G	, (PERIOD) W-BK-R	— BR-S	, (COMMA) G-S
(F)	TAPE W-BL-R	▽ (APOST) W-G-BK	(W-G-R	) W-G-P	EOA W-G-BR	# W-G-BL	! W-R-P	; W-R-BK	: BK-O	LTRS W-O-BR
(G)	ALT MODE Y-O	ESC Y-BR	? W-P-R	TAB W-BR-P	VT W-BR-BK	FORM W-BL-P	EOT W-BL-BR	RU W-BL-BK	TAPE W-P-BL	X OFF W-BL-G
(H)		✳ O-BL	+ S-P	= S-BL	SOM S-G	X ON S-Y	% S-O	@ S-BR	< S-BK	> Y-P

WIRING SIDE OF 174723 CONNECTOR

6370 WD

ISSUE	DATE	AUTH NO
2	3-5-64	79251
3	8-5-64	83008

TRANSLATION CHART FOR 194718 CABLE ASSEMBLY ARRANGEMENT "C" USED ON 5 TO 8 CODE CONVERTER

APPROVALS

D AND R	E OF M

E-NUMBER

PROD NO 6370WD

DATE 4-17-63
P.D. FILE NO 4 95AAA
DRAWN L.J.F. CHKD
ENGD R.J.K. APPD

TELETYPE CORPORATION

6370 WD

NO.	NOTES
1.	IN 194692 CONNECTOR, THE SYMBOLS θ, □, ‡, ✱, ϕ, Δ, Σ, Ψ, Γ, ⋈, #, ◊, ⊠, +, ⊕, ∞, ⊕, ⊟, ⊞, ⧗ INDICATE STRAPS BETWEEN TERMINALS MARKED WITH LIKE SYMBOLS.
2.	ANY CODE ALTERATIONS ARE TO BE MADE IN THE 194692 CONNECTOR.
3.	COLOR CODE IDENTIFICATION:

W - WHITE P - PURPLE
BK - BLACK G - GREEN
O - ORANGE R - RED
BL - BLUE S - SLATE
Y - YELLOW BR - BROWN

W-BK - WHITE-BLACK
W-O - WHITE-ORANGE
W-BL - WHITE-BLUE
W-Y - WHITE-YELLOW
W-P - WHITE-PURPLE
W-G - WHITE-GREEN
W-R - WHITE-RED
W-S - WHITE-SLATE
W-BR - WHITE-BROWN
Y-G - YELLOW-GREEN
BK-Y - BLACK-YELLOW
R-BL - RED-BLUE
R-G - RED-GREEN
R-Y - RED-YELLOW
BR-BL - BROWN-BLUE
BR-G - BROWN-GREEN
BR-Y - BROWN-YELLOW
BK-BL - BLACK-BLUE
BK-G - BLACK-GREEN
BK-R - BLACK-RED
R-O - RED-ORANGE
R-S - RED-SLATE
R-BR - RED-BROWN
O-G - ORANGE-GREEN
O-S - ORANGE-SLATE
O-BR - ORANGE-BROWN
BK-S - BLACK-SLATE
BK-BR - BLACK-BROWN
BL-S - BLUE-SLATE
BL-G - BLUE-GREEN
G-S - GREEN-SLATE
BR-S - BROWN-SLATE

W-BK-R - WHITE-BLACK-RED
W-O-G - WHITE-ORANGE-GREEN
W-O-BL - WHITE-ORANGE-BLUE
W-BK-O - WHITE-BLACK-ORANGE
W-BK-P - WHITE-BLACK-PURPLE
W-BK-G - WHITE-BLACK-GREEN
W-R-G - WHITE-RED-GREEN
W-R-Y - WHITE-RED-YELLOW
W-O-BR - WHITE-ORANGE-BROWN
BK-O - BLACK-ORANGE
W-R-BK - WHITE-RED-BLACK

NO.	NOTES
	W-R-P - WHITE-RED-PURPLE
	W-G-BL - WHITE-GREEN-BLUE
	W-G-BR - WHITE-GREEN-BROWN
	W-G-P - WHITE-GREEN-PURPLE
	W-G-R - WHITE-GREEN-RED
	W-G-BK - WHITE-GREEN-BLACK
	W-BL-R - WHITE-BLUE-RED
	W-BL-G - WHITE-BLUE-GREEN
	W-P-BL - WHITE-PURPLE-BLUE
	W-BL-BK - WHITE-BLUE-BLACK
	W-BL-BR - WHITE-BLUE-BROWN
	W-BL-P - WHITE-BLUE-PURPLE
	W-BR-BK - WHITE-BROWN-BLACK
	W-BR-P - WHITE-BROWN-PURPLE
	W-P-R - WHITE-PURPLE-RED
	Y-BR - YELLOW-BROWN
	Y-O - YELLOW-ORANGE
	Y-P - YELLOW-PURPLE
	S-BK - SLATE-BLACK
	S-BR - SLATE-BROWN
	S-O - SLATE-ORANGE
	S-Y - SLATE-YELLOW
	S-G - SLATE-GREEN
	S-BL - SLATE-BLUE
	S-P - SLATE-PURPLE
	O-BL - ORANGE-BLUE
4.	TERMINAL DESIGNATIONS ENCLOSED IN PARENTHESES ARE FOR REFERENCE AND ARE NOT MARKED ON COMPONENT.

194670 TRANSFER TREE END OF CABLE

	(10)	(9)	(8)	(7)	(6)	(5)	(4)	(3)	(2)	(1)
(A)	SP BK-S ‡	UC-SP ‡	9 O-BR	O W-P	CR W-R-Y□	UC-CR □	5 R-S	T Y-G	BLANK θ	UC-BLANK θ
(B)	UC-LF Δ	FIGS-M ϕ	UC-M ϕ W-BK-R	M W-BL	N W-Y	UC-N + G-S	FIGS-N +	FIGS-H ✱	UC-H W-G-BL ✱	H R
(C)	8 O-S	FIGS-G Σ	UC-G BL-G Σ	G G	R W-S	4 R-O	FIGS-L ⊕	UC-L W-G-P	L W-O	LF Δ W-R-G
(D)	3 BK-R	FIGS-V ⊗	UC-V ⊗ W-R-BK	V R-BL	C O	UC-C ∞ BK-O	FIGS-C ∞	O (ZERO) BR-Y	P W-G	I S
(E)	FIGS-B ⊟	UC-B ⊟ W-P-R	B BK	D BL	UC-D BL-S Γ	FIGS-D Γ	FIGS-Z ♥	UC-Z BK-BR♥	Z BR-G	E Y
(F)	UC-X W-O-G✱	X R-Y	F P	UC-F ⊞ W-R-P	FIGS-F ⊞	6 R-BR	Y BR-BL	S W-BR	UC-S ⋈ W-BK-G	FIGS-S ⋈
(G)	FIGS	J BR	UC-J ⊠ W-G-BK	FIGS-J ⊠	2 BK-G	W R-G	A W	UC-A BR-S◊	FIGS-A ◊	FIGS-X #
(H)			LTRS W-O-BR	K W-BK	UC-K ⧗ W-G-R	FIGS-K ⧗	I BK-BL	Q W-R	U BK-Y	7 O-G

WIRING SIDE OF 194692 CONNECTOR

194671 DIODE MATRIX END OF CABLE

	(10)	(9)	(8)	(7)	(6)	(5)	(4)	(3)	(2)	(1)
(A)	J BR	I S	H R	G G	F P	E Y	D BL	C O	B BK	A W
(B)	T Y-G	S W-BR	R W-S	Q W-R	P W-G	O W-P	N W-Y	M W-BL	L W-O	K W-BK
(C)	3 BK-R	2 BK-G	1 BK-BL	0 (ZERO) BR-Y	Z BR-G	Y BR-BL	X R-Y	W R-G	V R-BL	U BK-Y
(D)	8 BL-G	$ BL-S	" (QUOTES) BK-BR	SP BK-S	9 O-BR	8 O-S	7 O-G	6 R-BR	5 R-S	4 R-O
(E)	CR W-R-Y	LF W-R-G	BELL W-BK-G	WRU W-BK-P	EOM W-BK-O	\ W-O-BL	/ W-O-G	, (PERIOD) W-BK-R	— BR-S	, (COMMA) G-S
(F)	TAPE W-BL-R	▽ (APOST) W-G-BK	(W-G-R	) W-G-P	EOA W-G-BR	# W-G-BL	! W-R-P	; W-R-BK	: BK-O	LTRS W-O-BR
(G)	ALT MODE Y-O	ESC Y-BR	? W-P-R	TAB W-BR-P	VT W-BR-BK	FORM W-BL-P	EOT W-BL-BR	RU W-BL-BK	T-A-P-E W-P-BL	X OFF W-BL-G
(H)		✱ O-BL	+ S-P	= S-BL	SOM S-G	X ON S-Y	% S-O	@ S-BR	< S-BK	> Y-P

WIRING SIDE OF 174723 CONNECTOR

6371 WD

ISSUE	DATE	AUTH NO
2	3-5-64	79251
3	6-4-64	81242
4	8-5-64	83008

TRANSLATION CHART FOR 194719 CABLE ASSEMBLY (ARRANGEMENT "A") USED ON 5 TO 8 CODE CONVERTERS

APPROVALS

D AND R	E OF M

E-NUMBER

PROD. NO. 6371WD

DATE 5-21-63
P.D. FILE NO. 4-95AAA
DRAWN L.J.F. CHKD
ENGD R.J.K. APPD

TELETYPE CORPORATION

6371WD

ET 131451

ET 08 41
TC25516-54