CHANGES AND ADDITIONS TO

BULLETIN 1082B, ISSUE 2 BULLETIN 1100B, ISSUE 2
BULLETIN 1088B, ISSUE 2 BULLETIN 1117B, ISSUE 2

PARTS - MODEL 14 TYPING REPERFORATOR

The 98873 base plate has been replaced by a 105601 base plate assembly which has been redesigned but retains its original number. The main bail bracket mounting holes and the type bar segment mounting holes of the new style base plate have been increased in diameter to facilitate concentric positioning of these assemblies. Locating links are provided at the two outer mounting holes for the main bail bracket and type bar segment on the under side of the base plate. Screws with notched heads are used for fastening the positioning links after they are properly adjusted. Four holes, 3/8" dia., have been provided to permit access to the screws mounting the pull bar spring plates. Another hole for positioning a locating gauge has also been included. See Figure 1.

To enable concentric positioning of the main bail and code bars a 124479 locating gauge has been provided for use in repair shops. See Figure 2. This gauge, however, may be used only with the new style bases which include the hole for positioning the gauge.

To improve main clutch operation on all units incorporating a 74502 driven clutch and operating at 75 wpm, the 6993 clutch spring has been replaced by a 122059 clutch spring. The 6993 spring is still used on units operating at 60 wpm. For identification the 122059 spring has one full turn at one end painted yellow.

The 91899 type bar segment with posts retains its original number but has been redesigned with a square fulcrum rod slot instead of a radial slot. The radius of the segment shoulder, against which the spring plates rest, has been decreased to obtain closer adjustment for the pull bar-type bar engagement. The 6825 spring bracket has been redesigned to correspond and also retains its original number.

The two 6826 spring brackets have been replaced by one 124146 bracket - left and one 124147 bracket - right.

The 6746 hex head screws and 7002 washers used to secure the 6825, 124146 and 124147 spring brackets have been replaced by 151658 button head screws and 8330 washers to allow greater adjustment.

The 7037 spacer washers have been replaced by 124148 spacer washers. New style spacer washers can only be used with the new style type bar segment.

The type bars have been modified with a contour change at the pallet end. This change affects only the appearance of the type bar, and since old and new style type bars are interchangeable and can be readily identified, old part numbers have been retained.

A modified type bar backstop with a .095" thick sirvene strip has been assigned Part No. 135268 and is for use only with all new style type bars (contour changed at pallet end). The 124535 backstop with a .125" thick

Copyright 1955 by Teletype Corporation

sirvene strip (illustrated in 833EE) will still be used with all old style or with mixed old and new style type bars since the modified backstop would cause interference between the tails of the old style type bars and adjacent pull bars.

The 113693 set of parts to provide an oil shield for a holding magnet selector is now available. See Figure 3 for parts ordering information.

See Figure 4 for the revised illustration of the 97333 end-of-line-indicator counter unit assembly.

The 102235 main bail bracket has been replaced by the 6969 main bail bracket which has been redesigned but retains its original number. The new style bracket will accommodate both the square post guide and roller guides for the main bail.

New and old style parts are interchangeable, except as noted.

* * *

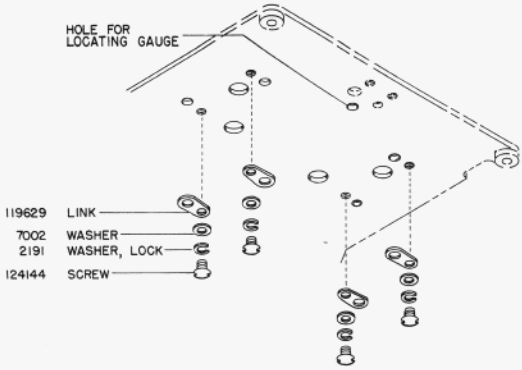

FIGURE 1

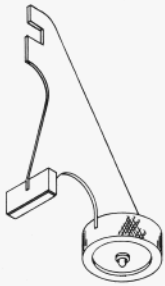

124479 LOCATING GAUGE

FIGURE 2

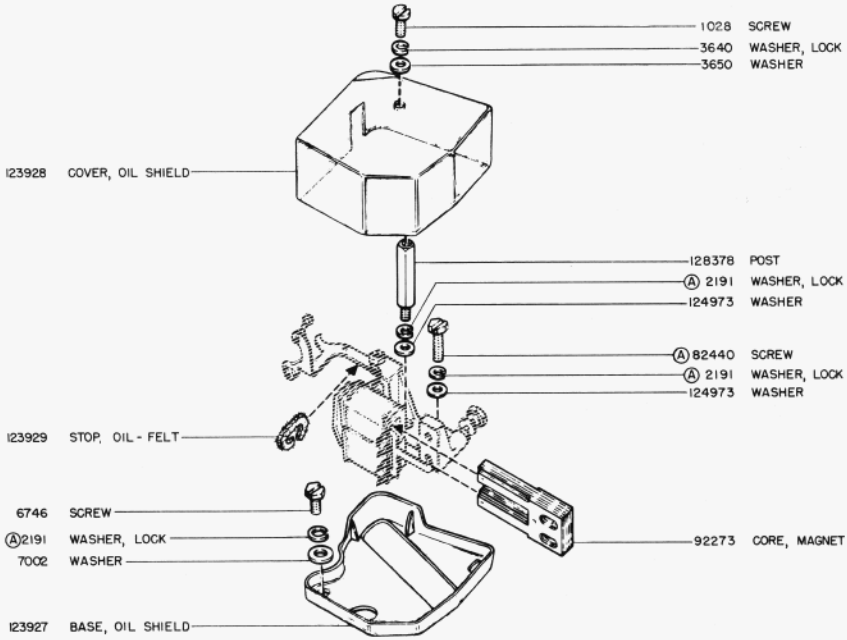

113693 SET OF PARTS TO PROVIDE AN OIL SHIELD FOR THE HOLDING MAGNET SELECTOR
(EXCLUDES PARTS MARKED Ⓐ)

FIGURE 3

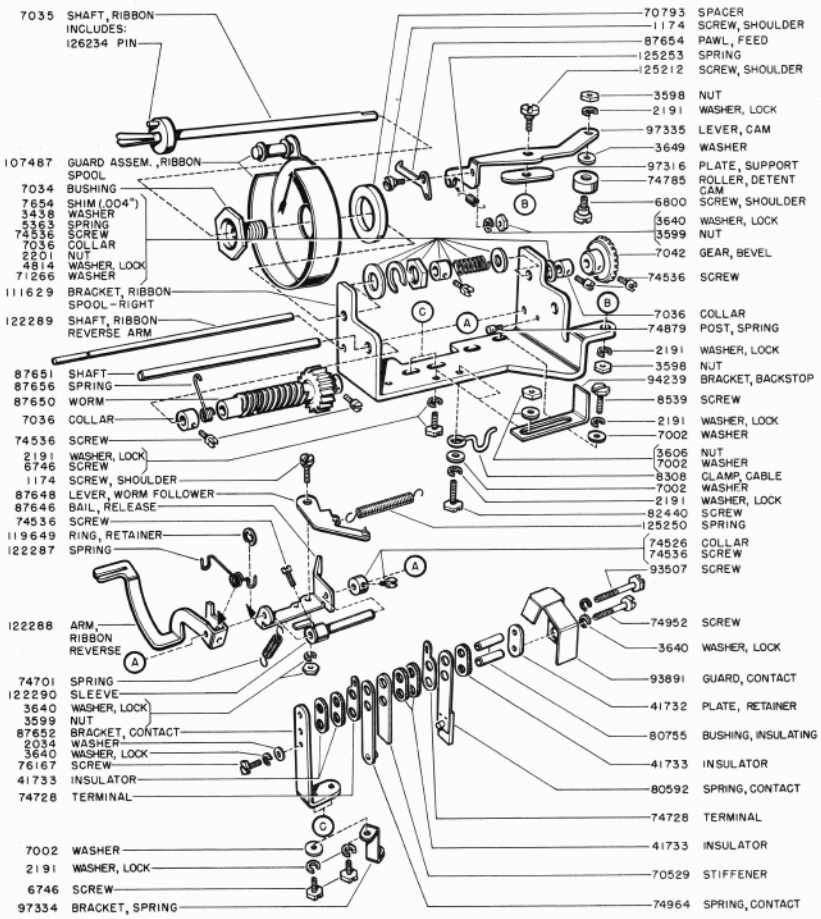

97333 COUNTER UNIT ASSEMBLY
FIGURE 4