28 APPARATUS CABINET (LBAC) FOR MULTIPLE MOUNTED PAGE PRINTERS

PARTS

PAINT FINISH COLOR CODE CHART

(For parts and assemblies requiring a paint finish.)

Color	Finish Suffixes				Color	Finish Suffixes			
	Wrinkle Finish	Smooth Finish	Textured Vinyl	Smooth Vinyl		Wrinkle Finish	Smooth Finish	Textured Vinyl	Smooth Vinyl
Beige		E1			Gray, Federal		BV	GQ	
Beige, Light		EL		HC	Gray, Green	AB (40)	BK	GA (45)	
Beige, Rose		ER			Gray, Light		EJ		HB (68)
Black	AA (37)				Gray, Covert				HE
Black, High Gloss		BA (34)			Gray, Olive		EH	GE	HF (46)
Black, Semi Gloss		BB			Gray, Maritime Deck	AJ	BJ		
Blue, Aqua		EK			Gray, Garland		EP		
Blue, Brussels Light		EC			Green, Gray	AB (40)	BK	GA (45)	
Blue, Medium		E5			Green, Moss		EM		HD
Brown, Dark	AD (38)				Ivory		EN		
Brown, Light	AC (39)				Pink, Rose		EU		
Fawn				HG	Turquoise		EV		
Gray, Beige			GC		White		EH		
Gray, Charcoal	AL	BZ	GF	HA	Yellow, Pastel		EG		
Gray, Dark			GB						
Gray, Navy Light		BR							

The double asterisk (**) denotes a painted part. Suffix to be applied following the part number.
Number in parenthesis indicates Bell System code.

**Refer to Page 1 for Finish Suffix

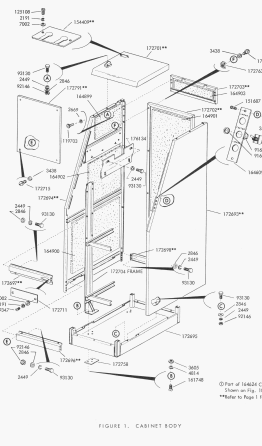

FIGURE 1. CABINET BODY

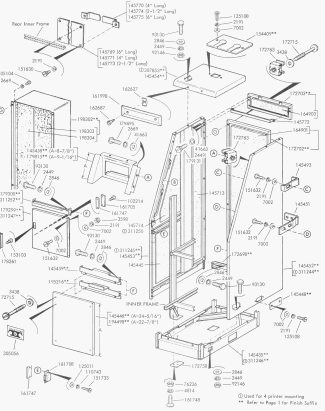

FIGURE 2. CABINET BODY

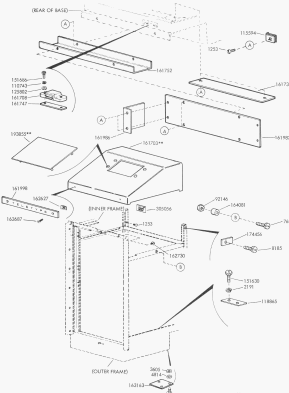

**Refer to Page 1 for Finish Suffix

FIGURE 3. CHANNEL DUCT AND TOP COVER

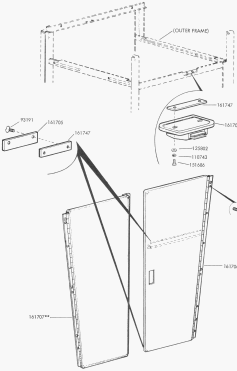

**Refer to Page 1 for Finish Suffix

FIGURE 4. REAR DOORS

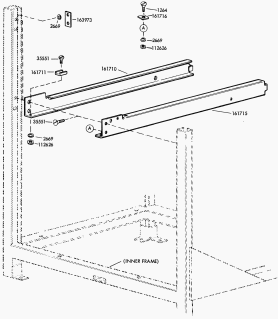

FIGURE 5. CHANNELS

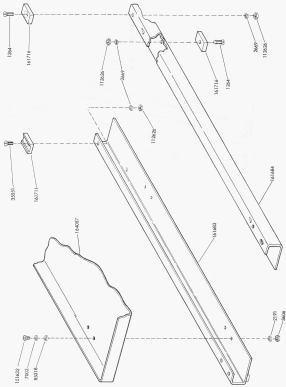

FIGURE 6 164088 PAN ASSEMBLY

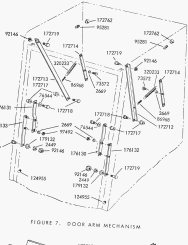

FIGURE 7. DOOR ARM MECHANISM

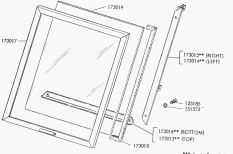

FIGURE 8. 172700** DOOR ASSEMBLY

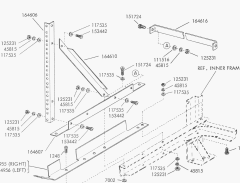

FIGURE 9. RELAY RACK FRAME

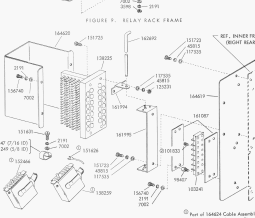

FIGURE 10. TERMINAL BLOCKS AND CABLE CONNECTORS

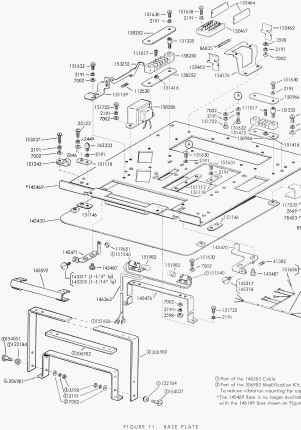
132464
131638
2191
131638
2191-40
132467
132462
2078
2191
7002
132467
131335
140321
138230
132463
132522
131617
131416
131630
131632
2191
7002
131638
2191
130966
131139
131632
2191-40
7002
130396
7001
131721
7002
111817
131335
173974
2669
108162
130966
153837
2191
7002
2040
142333
2191
131118
2040
2191
131142
131630
131637
2191
131117
2191
*140460
131716
131414
117520
145430
131716
131532
2669
7002
2040
145446
REF. 11,10R
140401
110651
(131140)
131902
131902
131532
7002
(131140)
140400
140401
41383
131630
140487
140487
140397 (1-1/4" M)
140398 (1-1/8" M)
140317
(41318)
140489
146992
140400
140401
7002
2191
2040
131722
2191
(131630)
(131630)
(131140)
(131140)
(131140

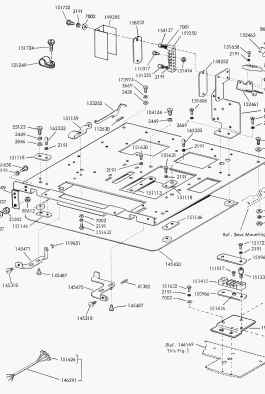
151722
2191
7002
149285
138253
134137
7001
151230
132463
96835
132462
151724
151638
2191
132464
121240
151414
138202
132467
151722
117074
151335
219
2849
3438
151721
151666
132461
2191
179544
151723
2849
2849
179544
151723
2849
2849
132332
25123
2849
3846
2191
151136
112630
151722
117535
151118
151420
151420
151420

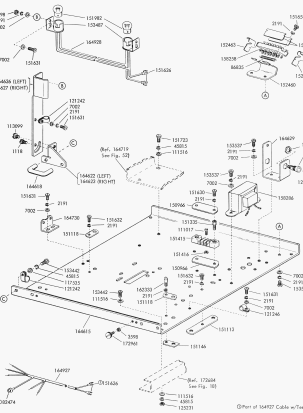

FIGURE 13. RECEIVE-ONLY BASE PLATE

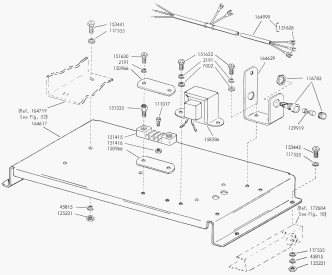

FIGURE 34. PAPER WINDER SHELF FOR SEND-RECEIVE BASE

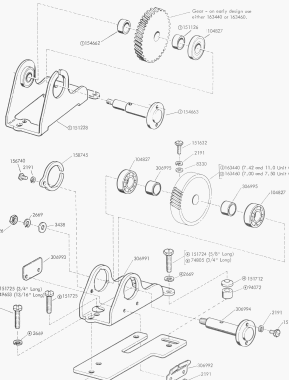

FIGURE 15. 154234 AND 164234 INTERMEDIATE GEAR ASSEMBLIES

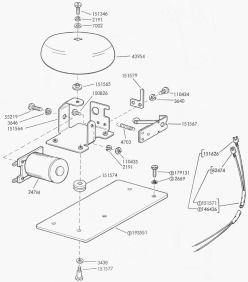

(1) Part of 151560
(2) Part of 146437
(3) Not Part of 151560 or 146437

FIGURE 16. 151560 AND 146437 BELL ASSEMBLIES

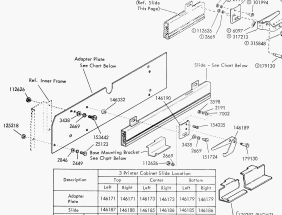

Description		3 Printer Cabinet Slide Location					
		Top		Center		Bottom	
		Left	Right	Left	Right	Left	Right
Adapter Plate		146171	146171	146170	146170	146170	146170
Slide		146187	146188	146185	146186	146185	146186
Base Mounting Bracket	Front	146164	146163	146170	146169	146182	146181
	Rear	146166	146165	146160	146167	146184	146183

Description		4 Printer Cabinet Slide Location							
		Top		Top Center		Bottom Center		Bottom	
		Left	Right	Left	Right	Left	Right	Left	Right
Adapter Plate		146171	146171	146172	146172	146179	146179	313249	313249
Slide		146187	146188	146185	146186	146185	146186	146185	146186
Base Mounting Bracket	Front	146164	146163	146178	146177	146175	146176	146173	146174
	Rear	146166	146165	146166	146167	146168	146167	146168	146167

(2) Part of the 313847 Modification Kit to provide latch for cabinet Specification 3340T2.

FIGURE 17. SLIDE MECHANISMS

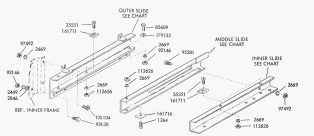

OUTER SLIDE		
SLIDE LOCATION	SIDE	PART NUMBER
TOP	LEFT	172630
	RIGHT	172631
CENTER	LEFT	172664
	RIGHT	172665
BOTTOM	LEFT	172628
	RIGHT	172629

MIDDLE SLIDE		
SLIDE LOCATION	SIDE	PART NUMBER
TOP CENTER BOTTOM	LEFT	172683
	RIGHT	172682

INNER SLIDE		
SLIDE LOCATION	SIDE	PART NUMBER
TOP CENTER BOTTOM	LEFT	172685
	RIGHT	172684

FIGURE 18. SLIDE MECHANISMS (Continued)

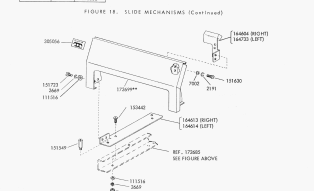

FIGURE 19. SEND-RECEIVE KEYBOARD COVER

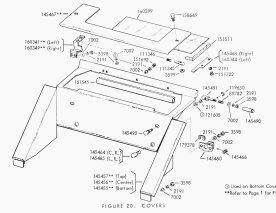

FIGURE 20. COVERS

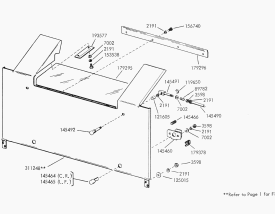

FIGURE 21. 3112267** BOTTOM COVER ASSEMBLY

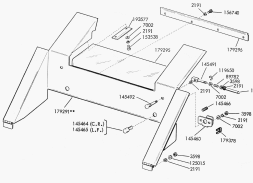

** Refer to Page 1 for Finish Suffix

FIGURE 22. TOP AND MIDDLE COVERS

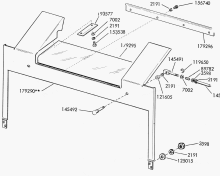

**Refer to Page 1 for Finish Suffix.

FIGURE 23. BOTTOM COVER

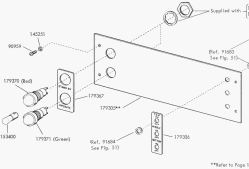

**Refer to Page 1 for Finish Suffix

FIGURE 24. CONTROL PANEL

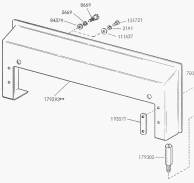

**Refer to Page 1 for Finish Suffix.

FIGURE 25. KEYBOARD PANEL

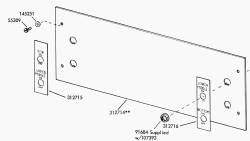

**Refer to Page 1 for Finish Suffix.

FIGURE 26. FIXED CONTROL PANEL (4 Printer Cabinet)

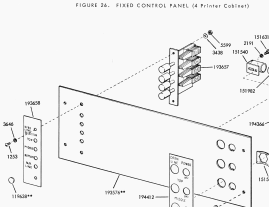

Note:
Cable components are found on Fig. 31.
**Refer to Page 1 for Finish Suffix.

FIGURE 27. FIXED CONTROL PANEL

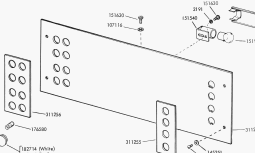

**Refer to Page 1 for Finish Suffix.

FIGURE 28. FIXED CONTROL PANEL

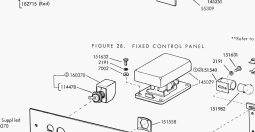

① Part of 194499 Cable Assembly
② Part of 194799 Cable Assembly
**Refer to Page 1 for Finish Suffix.

FIGURE 29. FIXED CONTROL PANEL

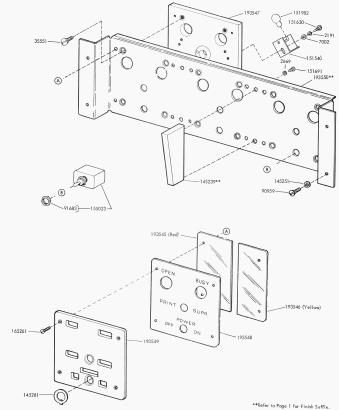

FIGURE 38. CONTROL PANEL

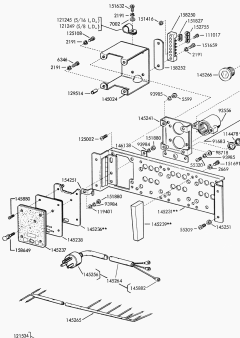
131632
2191
131416
192530
192027
192753
1
2
3
4
5
6
7
8
9
10
11
12
13
14
15
16
17
18
19
20
21
22
23
24
25
26
27
28
29
30
31
32
33
34
35
36
37
38
39
40

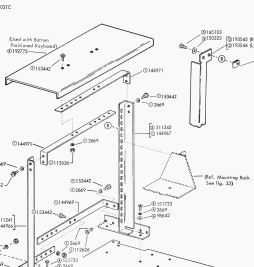

①Part of the 144967 Rack Assembly
②Part of the 311243 Rack Assembly (22 5/16" Wide) and the 315797 Rack Assembly (23 3/16" Wide), Same as 144967 except where shown
③Used with 3 Electrical Service Units
④Not part of rack Assemblies

FIGURE 32. 144969, 311243 AND 315797 MOUNTING RACK ASSEMBLIES

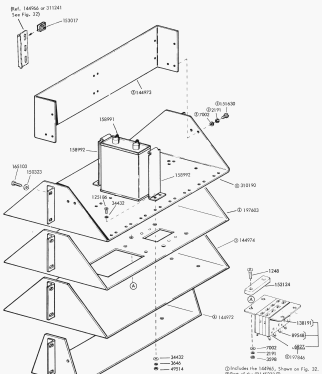

(Ⓐ) Includes the 146966. Shown on Fig. 32.
(Ⓑ) Part of the (Ⓐ) 142272 (Ⓒ)
(Ⓒ) Part of the (Ⓐ) 142274 (Ⓐ)
(Ⓓ) Part of the 145267 Modification Kit, Model Terminal Service Unit Mounting Rack.
(Ⓔ) Part of the 202231 (Ⓓ)

FIGURE 33. 145273, 145274 AND 313231 MOUNTING RACK ASSEMBLIES

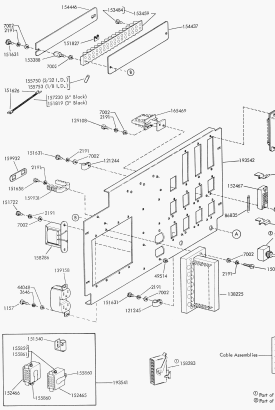

FIGURE 34. 193535 CONNECTOR PANEL ASSEMBLY

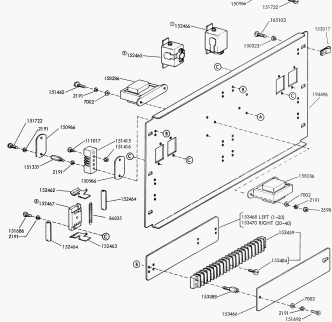

FIGURE 35. 195394 MOUNTING PLATE ASSEMBLY

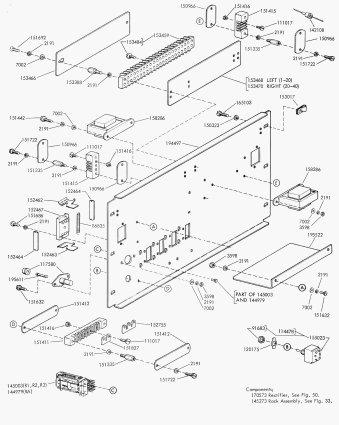

Components:
170273 Rectifier, See Fig. 50,
143273 Rack Assembly, See Fig. 33.

FIGURE 36. 195395 MOUNTING PLATE ASSEMBLY

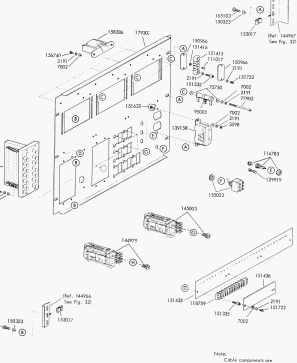

Note:
Cable components are found on Fig. 31.

Companion:
179370 Selector Magazine Drawer (See Fig. 49)

FIGURE 37. 179373 ELECTRICAL SERVICE PANEL ASSEMBLY

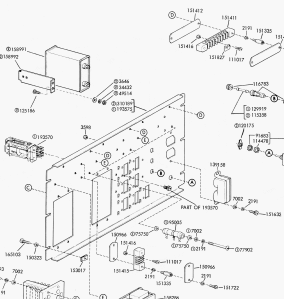
151412
151411
2191
191203
151412
2191
151414
151427
111017
151722
(1)
(2)
(3)
(4)
(5)
(6)
(7)
(8)
(9)
(10)
(11)
(12)
(13)
(14)
(15)
(16)
(17)
(18)
(19)
(20)
(21)
(22)
(23)
(24)
(25)
(26)
(27)
(28)
(29)
(30)
(31)
(32)
(33)
(34)
(35)
(36)
(37)
(38)
(39)
(40)

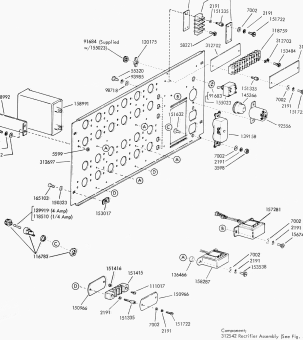

FIGURE 39. 312696 ELECTRICAL SERVICE PANEL ASSEMBLY

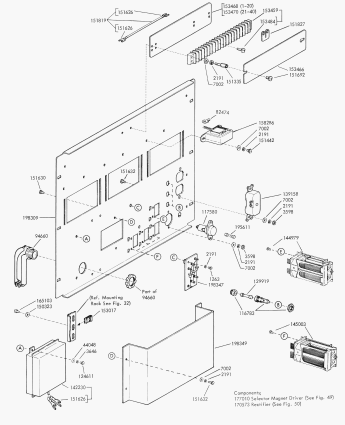

FIGURE 40. 198306 ELECTRICAL SERVICE PANEL ASSEMBLY

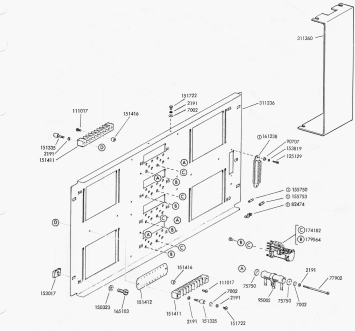

(1)Part of 311233 Cable Assembly Component, 190669 Selector Magnet Driver (See Fig. 49)

FIGURE 41. 311229 ELECTRICAL SERVICE PANEL ASSEMBLY

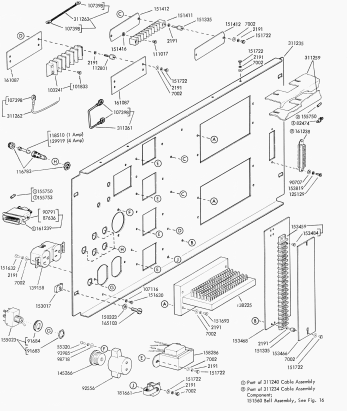
107298
311283
107298
151412
151411
151335
151412
7002
2191
151722
151416
2191
113017
151722
2191
7002
311236
311259
163307
2191
113017
151722
2191
7002
103247
161830
151722
2191
7002
197326
311353
161797
107298
151722
2191
7002
151722
2191
7002
151722
151722
2191
7002
151722
151722
2191
7002
151722

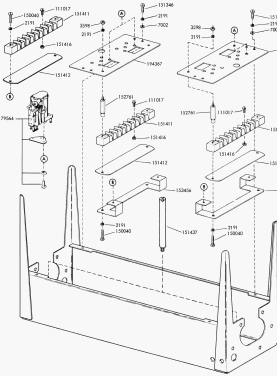

Components:
193369 Selector Magnet Driver Assembly (See Fig. 49)
194369 Selector Magnet Driver Assembly (See Fig. 49)

FIGURE 43. 193369 SELECTOR MAGNET DRIVER MOUNTING ASSEMBLY

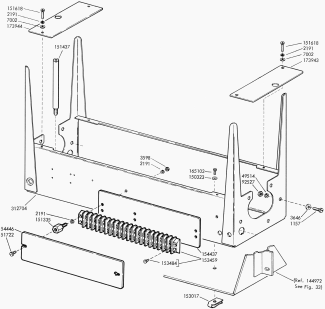

FIGURE 44. 3126PB SELECTOR MAGNET DRIVER MOUNTING ASSEMBLY

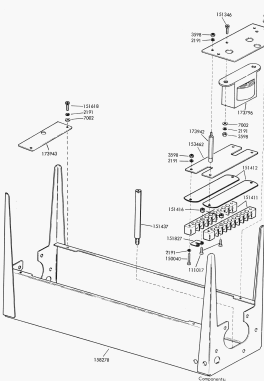

Components:
309863 Selector Magnet Driver (See Fig. 48)
142261 Rectifier (See Fig. 48)

FIGURE 45. 310084 SELECTOR MAGNET DRIVER MOUNTING ASSEMBLY

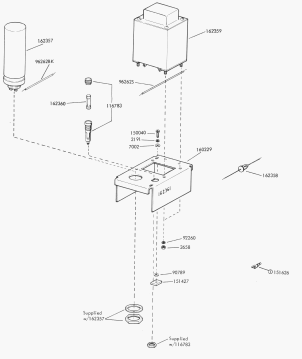

FIGURE 46. 162361 RECTIFIER ASSEMBLY

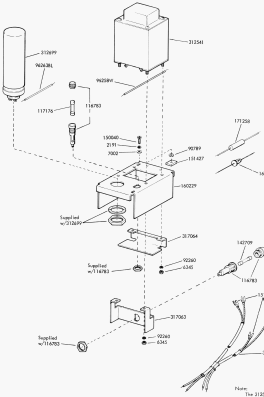

FIGURE 47. 312542 RECTIFIER ASSEMBLY

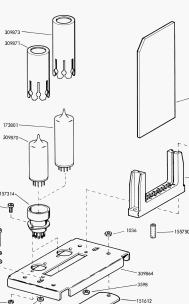

FIGURE 48. 309863 SELECTOR MAGNET DRIVER ASSEMBLY

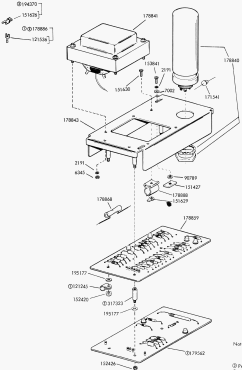

FIGURE 49. 177010, 192869 AND 194369 SELECTOR MAGNET DRIVER ASSEMBLIES

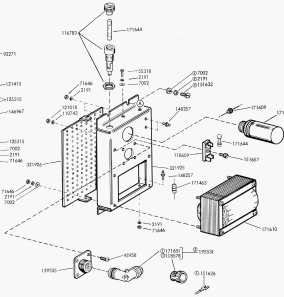

① Part of the 195531 Cable Assembly
② Not part of 170573 Rectifier Assembly.

FIGURE 50. 170373 RECTIFIER ASSEMBLY

CABLE CLAMP		
Part Number	Width	I.D.
131242	5/8"	1/8"
131243	5/8"	3/16"
131244	5/8"	1/4"
131245	5/8"	3/16"
131246	3/8"	1/4"
131247	3/8"	7/16"
131248	3/8"	1/2"
131249	1/2"	3/8"
131250	1/2"	3/4"
32235	1/2"	1"

INSULATING SLEEVE		
Part Number	Length	I.D.
153750	1/2"	3/32"
153751	1"	1/8"
153752	1/2"	3/64"
153753	1/2"	1/8"
153754	1/2"	5/32"
153755	3/8"	11/64"
181892	1"	9/64"

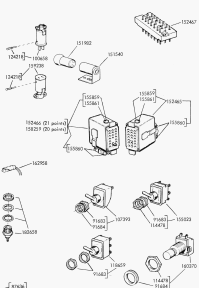

FIGURE 51. CABLE COMPONENTS

Driven Wheel Diameter	Driver Wheel	"O" Ring Belt
6-3/8"	164721	164724
5-1/2"	164313	164314

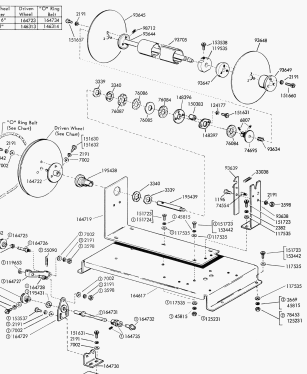

FIGURE 32. 164925 MODIFICATION KIT: TO ADD PAPER WINDER

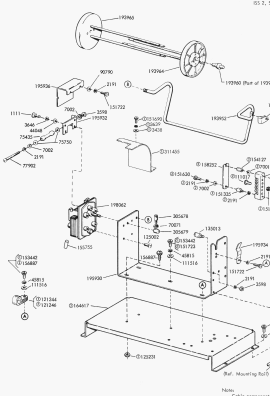
192960
192964
192960 (Pair of 192964)
90780
2191
195836
192732
7003
195932
3208
3646
3654
2543
192750
7002
2195
77902
1111
192962
12342
12506
3640
131686
(1)
(2)
(3)
(4)
(5)
(6)
(7)
(8)
(9)
(10)
(11)
(12)
(13)
(14)
(15)
(16)
(17)
(18)
(19)
(20)
(21)
(22)
(23)
(24)
(25)
(26)
(27)
(28)
(29)
(30)
(31)
(32)
(33)
(34)
(35)
(36)
(37)
(38)
(39)
(40)

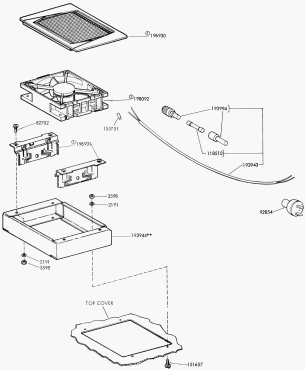

Specification 501035

Ⓟ Part of 193940 Pan Assembly
**Refer to Page 1 for Finish Suffix.

FIGURE 34. 193940** MODIFICATION KIT: TO PROVIDE VENTILATION FOR CABINETS

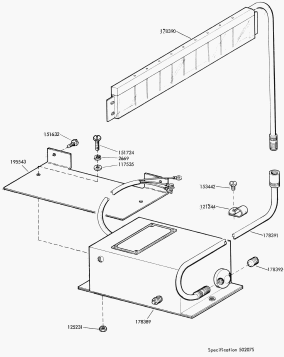

FIGURE 55. 195540 MODIFICATION KIT: TO PROVIDE STATIC ELIMINATOR TO NEUTRALIZE ELECTROSTATIC CHARGE ON PAGE COPY

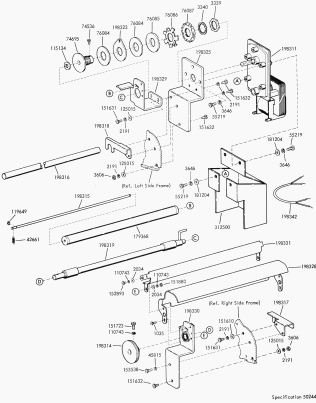

FIGURE 36. 196310 MODIFICATION KIT TO PROVIDE FACILITIES FOR SPROCKET FEED PAPER

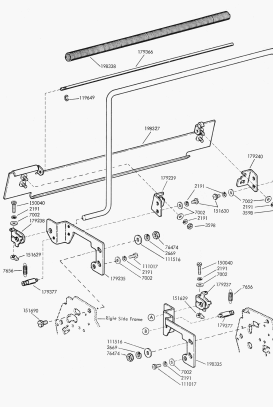

FIGURE 27. 198310 MODIFICATION KIT TO PROVIDE FACILITIES FOR SPROCKET FEED PAPER (Continued)

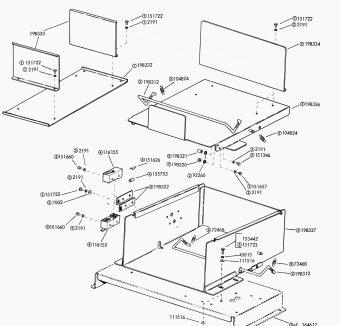

(1)-Part of 198345 Paper Tray Assembly
(2)-Part of 198344 Shelf Assembly
(3)-Part of 198340 Paper Bin Assembly
(4)-Part of 198341 Cable Assembly
(5)-Used in Lower mounting position
Specification 52046

FIGURE 5B. 198310 MODIFICATION KIT TO PROVIDE FACILITIES FOR SPROCKET FEED PAPER (Continued)

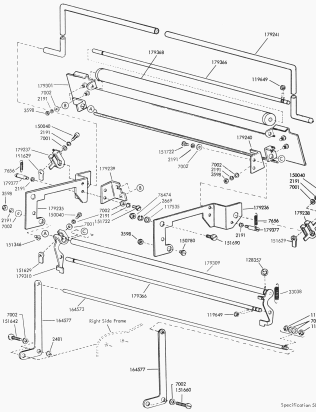

Specification 560920

FIGURE 59. 179269 MODIFICATION KIT TO PROVIDE COPY DISPLAY

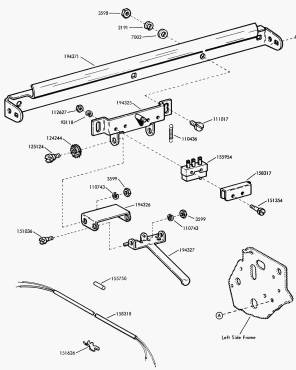

FIGURE 60. 194324 MODIFICATION KIT TO PROVIDE PAPER-OUT ALARM

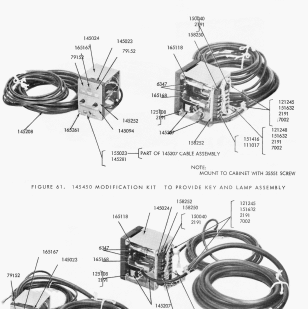

FIGURE 61. 145430 MODIFICATION KIT TO PROVIDE KEY AND LAMP ASSEMBLY

FIGURE 62. 145910 MODIFICATION KIT TO PROVIDE KEY AND LAMP ASSEMBLY

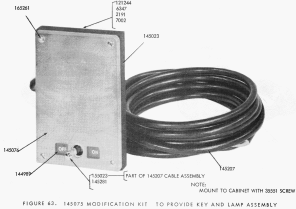

FIGURE 43. 145075 MODIFICATION KIT TO PROVIDE KEY AND LAMP ASSEMBLY

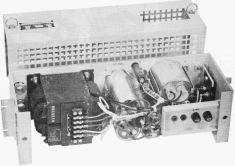

FIGURE 44. 145017 RECTIFIER-48 VOLTS D.C.

NUMERICAL INDEX (Continued)

Part Number	Description and Page Number
113099	Screw, 6-40 Thumb 13
113476	Washer, 15/32-10 Hex 33, 22, 30, 32, 43
113594	Screw, Pan 32
113596	Screw, 1 Hex 32
113598	Nut, Speed 3, 26
113615	Switch 32
113673	Holder, Fuse 13, 14, 21, 22, 23, 24, 25, 26, 27, 28
113716	Fuse, 1/2 Amp 3/4-96, 61
113753	Washer, Flat 10 Sq. 46, 49, 50
113760	Holder, Fuse 20, 24
113763	Fuse, 1/4 Amp 3/4-96, 62
113765	Clamp, 3/4-10 Cable 44
113769	Holder, Fuse 46
113770	Holder, Fuse 49
113779	Washer, Sealed 31, 33
113863	Cover 5
113867	Screw, 8-32 x 3/8 Rd 3
113881	Washer, Flat 25
113923	Bolting 46
113924	Bolter, Plug 23
113925	Bolting, Spring 30, 31, 33
113926	Ring, Retaining 19, 20
113931	Ring, Retaining 11, 12
113932	Ring, Retaining 46
113933	Ring, Retaining 46
113934	Screw, Pan 6-32 x 3/8 3
113935	Screw, 10-24 Hex 32, 22, 23
113936	Nut, 10-24 Hex 42, 46
113939	Screw, 1/4-20 Cable 25, 43
113940	Clamp, 3/16 Cable 11, 46
113941	Clamp, 1/4-20 Cable 12, 26, 45, 47, 49, 50
113942	Clamp, 3/8-20 Cable 25, 28, 43, 45, 47, 50
113946	Clamp, 1/2-20 Cable 13, 43, 47
113947	Clamp, 7/16-20 Cable 30, 45
113948	Clamp, 1/2-20 Cable 45, 50
113949	Clamp, 3/4-20 Cable 10, 12, 45
113950	Clamp, 3/4-20 Cable 45
113951	Clamp, 1-20 Cable 45
113953	Spacer, .344" Thk 44
113955	Terminal 33, 45
113956	Terminal 43, 45
113963	Screw, 1/4-20 Hex 34
113964	Connector 10
113967	Spacer 43
113968	Washer, Lock 44
113970	Pin, Drive 45
113966	Washer, Lock 34
124611	Screw, 8-32 x 5/8 Hex 34
124612	Washer, Lock 34
125002	Screw, 8-32 x 3/8 Pan 25, 26, 47
125011	Washer, Flat 6
125012	Washer, Flat 19, 20, 47, 50
125156	Screw, 6-32 x 5/8 Rd 3, 4, 25, 26, 50
125159	Screw, 4-40 Shoulder 34
125160	Screw, 4-40 x 1/4 Rd 34
125161	Screw, 10-32 x 1/4 Rd 9
125166	Screw, 8-32 x 5/8 FT 27, 32
125170	Screw, 1/4-32 Hex 17
125171	Nut, 10-32 Hex 10, 13, 14, 18, 19, 20, 21
125172	Washer, Insulating 46
125802	Washer, Flat 5, 6

Part Number	Description and Page Number
125757	Ring, Retaining 33
125758	Spacer, .307" Thk 25
129919	Fuse, 4 Amp 3/4-96, 13, 14, 21 22, 23, 24, 25
130203	Stud 47
130466	Spacer, .220" Thk 32
130819	Screw, 3-48 x 1 Rd 27
130823	Block, 6 Row Terminal 18, 20, 21, 22, 23
130158	Connector, Quick-Reconnect 19, 20, 21 to 34, 36
130325	Connector, 5 Pin Plug 44
141068	Diode 30
142205	Suppressor, Electrical Noise 34
142279	Fuse, 2 Amp 4
142280	Fuse, Holder 4, 26, 27
142746	Breaker, Left Bk 27, 31
142747	Breaker, Right Bk 31
142748	Brace, Cover 26
142771	Brace, Upper 26
142772	Bracket 27, 28
142773	Bracket, Terminal Strip 27
142774	Bracket 27, 28
142775	Bolter, Hold Down 26, 27, 34
144589	Plate, Designation 34
143003	Relay, 12 V 1, 34
143010	Modification Kit 2, 35
143011	Relay, 24 V 1
143023	Panel, Rubber 35, 36
143024	Shield Assembly 25, 35
143025	Bracket 25
143073	Panel, Plastic 35
143074	Plate, Designation 35
143075	Modification Kit 3, 36
143076	Panel, Rubber 36
143077	Plate, Designation 36
143101	Jumper, 4-10" Green 25
143102	Cable Assembly 25, 36
143103	Cable Assembly 35
143104	Panel 36
143105	Stud Assembly, Control 2, 35
143106	Stud 35
143107	Panel, Plastic 35
143108	Plate, Designation 35
143209	Nut, Spec. Hex 25, 35
143241	Panel, Fuse 25
143242	Panel, Rubber 25
143243	Panel, Plastic 25
143245	Connector, 3 Pin Plug 25, 43
143246	Cable Assembly 43
143247	Cable 25
143248	Fuse, 1/4 Amp 3/4-96, 25, 33, 36
143267	Indicator 27
143268	Bracket Assembly, Mounting 2, 27, 30
143269	Bracket Assembly, Mounting 2, 27
143281	Ring 34, 35, 36
143317	Screw, 4-40 Sq 11
143318	Screw, 4-40 Sq 11, 12
143319	Plate, Old Drive 11, 12
143435**	Base, Outer Frame 4
143436**	Base, Frame 4
143437**	Panel, Front 4
143438**	Plate, Duct 4
143439	Modification Kit 2, 35
143511	Bracket 4
143512	Panel, Rear Side 4
143513	Panel, Left Side 4

Part Number	Description and Page Number
143534**	Cover, Top 4
143535**	Cover, Bottom 19
143536**	Cover, Center 19
143537**	Cover, Slip 19
143538**	Cover 4
143539**	Frame, Outer 4
143540	Bracket 19, 20
143541	Keyboard Assembly CR 19, 20
143542	Keyboard Assembly CR 19, 20
143543	Spring, Compression 19, 20
143547**	Door 19
143548	Clamp, Right 19
143549	Plate, Base 19
143570	Bracket, Left 12
143571	Link-Rear 11, 12
143572	Link-Front Right 11
143573	Plate 20
143587	Screw, 6-40 Shoulder 11, 12
143588	Washer, Lock 11, 12
143589	Bolt, Latch 19, 20
143591	Extension 19, 20
143592	Screw, 6-40 Thumb 19, 20
143593	Washer, Flat 19, 20
143594	Pin, Pivot 19, 20
143713	Fuse, Fill 4
143760	Plate 4
143779	Bracket 4
143780	Plate 4
143781	Bracket 4
143783	Plate 4
143784	Bracket 4
143785	Plate 4
143786	Screw, 4-40 x 1/4 Oval 25
143802	Terminal 25, 45
143803	Terminal 25, 45
143804	Plate 25
143549	Plate, Base 11, 12
143550	Bracket, Right 12
143551	Bracket, Left Top 12
143552	Bracket, Right Top 12
143553	Bracket, Left 12
143554	Bracket, Right Center 12
143555	Bracket, Left Center 12
143556	Bracket, Right Bottom 12
143557	Bracket, Left Bottom 12
143571	Plate, Top 12
143572	Plate, Bottom 12
143573	Plate, Rear 12
143574	Bracket, Right Bottom 12
143575	Bracket, Left Bottom 12
143576	Bracket, Right Rear 12
143577	Bracket, Left Rear 12
143578	Bracket, Left Center 12
143579	Bracket, Right Center 12
143580	Bracket, Left Center 12
143581	Plate, Top 12
143582	Plate, Bottom 12
143583	Plate, Rear 12
143584	Bracket, Right Bottom 12
143585	Bracket, Left Bottom 12
143586	Bracket, Right Rear 12
143587	Bracket, Left Rear 12
143588	Plate, Left Center 12
143589	Plate, Right Center 12
143590	Bracket, Left Center 12
143591	Bracket, Right Center 12
143592	Wheel, Drive 46
143594	Bolt, O Ring 46
143620	Modification Kit 46
143622	Bolting, Spring 17
143625	Cable Assembly 13
144436	Cable w/Terminals 14
144437	Cable Assembly 14
144438	Bolter, 730 Chin 44

**Refer to Page 1 for Finish Suffix

NUMERICAL INDEX (Continued)

Part Number	Description and Page Number
146237	Terminal, Insulated 44
146296	Drab 44
146297	Bracket 44
146340	Screw, 6-40 x 5/8 Fil. 28, 37, 39 to 42, 51, 52
146323	Washer, Flat 26, 27, 29 to 36, 38
146383	Spacer, 1/8" Thk 46
146384	Spacer, 1/4" Thk 46
146396	Insulator, Terminal 11 to 14, 29 to 33
151036	Screw, 4-40 Shoulder 54
151113	Strip, Mounting 11, 12, 13
151114	Plate, Spacing 11, 12, 13
151126	Spacer, .250" Thk 10
151127	Spacer, Insulator 11, 12, 13
151128	Insulator 13
151228	Bracket-Bearing 15
151229	Screw, 10 to 14, 29 to 36, 38, 47
151246	Screw, 6-40 x 3/8 Fil. 16, 27, 29, 32, 34
151256	Screw, 2-56 x 15/32 Fil. 34
151257	Screw, 2-56 x 3/8 Fil. 30 to 33, 36, 37, 40
151312	Insulator, Terminal 30, 32, 35, 36, 37, 40, 42
151315	Block, Terminal 11 to 14, 29 to 33
151316	Block, Terminal 11 to 14, 29 to 33, 35, 36, 37, 39, 42, 45, 50
151427	Plate, Clamp 40 to 42
151435	Insulator, Terminal 31
151436	Bracket 42
151437	Stud 37, 39, 40
151442	Screw, 8-40 x 1/2 Hex 29, 30, 34, 44
151511	Gasket 19
151540	Washer 11, 22, 23, 24, 39, 45
151543	Spacer 19
151544	Post 19
151545	Nut, Speed 22, 23
151546	Nut, Assembly, Spring 2, 16, 36
151564	Bracket 16
151565	Bushing, Shoulder 16
151567	Armature w/Clapper 16
151568	Spring, Clapper 16
151572	Stud, Lock 19
151574	Grommet, Rubber 16
151577	Screw, 8-40 Shoulder 16
151579	Plate, Switching 16
151580	Screw, 4-40 x 1/4 Hex 16
151611	Spacer, Post 22, 23
151612	Spacer 42
151613	Screw, 6-40 x 7/16 Fil 37, 38, 39, 42
151626	Terminal 10 to 14, 16, 28, 34, 40, 41, 44, 46, 50, 52, 54
151629	Screw, 6-40 x 3/8 Fil. 44, 46
151630	Screw, 6-40 x 5/8 Fil. 4, 5, 11 to 15, 18, 22, 24, 27, 34, 36, 40, 46, 47, 51
151631	Screw, 6-40 x 3/8 Hex 10 to 12, 14, 16, 18, 21, 24, 34, 36, 40, 46, 47, 51
151632	Screw, 6-40 x 1/2 Hex 4, 5, 11 to 13, 21, 22, 23, 30, 34, 36, 40, 46, 47, 50, 52
151637	Screw, 8-40 x 1/4 Fil 30, 42
151638	Screw, 8-40 x 3/8 Fil. 30, 42
151639	Screw, 8-40 x 5/8 Fil. 30, 42
151640	Screw, 8-40 x 7/8 Fil. 42, 52
151656	Screw, 8-40 x 3/8 Fil 5, 6, 29, 32, 39
151667	Screw, 8-40 x 7/8 Fil 2
151669	Screw, 8-40 x 1/2 Fil 35
151640	Screw, 8-40 x 7/8 Fil. 46, 52, 53
151686	Screw, 8-40 x 3/8 Fil 5, 6, 29, 32, 39
151687	Screw, 8-40 x 7/8 Fil 2
151688	Screw, 8-40 x 1/2 Fil 41, 51, 53
151691	Screw, 10-32 x 3/8 Fil 24, 25
151692	Screw, 8-40 x 3/8 Fil 39, 29, 32, 39
151693	Screw, 8-40 x 1/2 Fil 32, 39
151712	Screw, 8-40 x 1/2 Fil 32, 39
151722	Arbor, Floor 15
151723	Screw, 6-40 x 3/4 Hex 12, 21
151724	Screw, 10-32 x 3/16 Hex 15, 17, 18, 19, 20, 21, 24, 25, 41, 42, 52
151725	Screw, 10-32 x 3/8 Hex 18, 22, 23, 24, 25, 26, 46, 47, 52, 53
151726	Screw, 10-32 x 5/8 Hex 18, 22, 23, 17, 46, 47
151727	Screw, 10-32 x 3/4 Hex 10, 13, 14, 15, 16, 17, 18, 19, 20
151728	Screw, 10-32 x 1 Hex 10, 13, 14, 15, 16, 17, 18, 19, 20
151729	Screw, 10-32 x 1 1/4 Hex 10, 13, 14, 15, 16, 17, 18, 19, 20
151730	Screw, 10-32 x 1 1/2 Hex 10, 13, 14, 15, 16, 17, 18, 19, 20
151731	Screw, 10-32 x 1 3/4 Hex 10, 13, 14, 15, 16, 17, 18, 19, 20
151732	Screw, 10-32 x 2 Hex 10, 13, 14, 15, 16, 17, 18, 19, 20
151733	Screw, 10-32 x 2 1/4 Hex 10, 13, 14, 15, 16, 17, 18, 19, 20
151734	Screw, 10-32 x 2 1/2 Hex 10, 13, 14, 15, 16, 17, 18, 19, 20
151735	Screw, 10-32 x 2 3/4 Hex 10, 13, 14, 15, 16, 17, 18, 19, 20
151736	Screw, 10-32 x 3 Hex 10, 13, 14, 15, 16, 17, 18, 19, 20
151737	Screw, 10-32 x 3 1/4 Hex 10, 13, 14, 15, 16, 17, 18, 19, 20
151738	Screw, 10-32 x 3 1/2 Hex 10, 13, 14, 15, 16, 17, 18, 19, 20
151739	Screw, 10-32 x 3 3/4 Hex 10, 13, 14, 15, 16, 17, 18, 19, 20
151740	Screw, 10-32 x 4 Hex 10, 13, 14, 15, 16, 17, 18, 19, 20
151741	Screw, 10-32 x 4 1/4 Hex 10, 13, 14, 15, 16, 17, 18, 19, 20
151742	Screw, 10-32 x 4 1/2 Hex 10, 13, 14, 15, 16, 17, 18, 19, 20
151743	Screw, 10-32 x 4 3/4 Hex 10, 13, 14, 15, 16, 17, 18, 19, 20
151744	Screw, 10-32 x 5 Hex 10, 13, 14, 15, 16, 17, 18, 19, 20
151745	Screw, 10-32 x 5 1/4 Hex 10, 13, 14, 15, 16, 17, 18, 19, 20
151746	Screw, 10-32 x 5 1/2 Hex 10, 13, 14, 15, 16, 17, 18, 19, 20
151747	Screw, 10-32 x 5 3/4 Hex 10, 13, 14, 15, 16, 17, 18, 19, 20
151748	Screw, 10-32 x 6 Hex 10, 13, 14, 15, 16, 17, 18, 19, 20
151749	Screw, 10-32 x 6 1/4 Hex 10, 13, 14, 15, 16, 17, 18, 19, 20
151750	Screw, 10-32 x 6 1/2 Hex 10, 13, 14, 15, 16, 17, 18, 19, 20
151751	Screw, 10-32 x 6 3/4 Hex 10, 13, 14, 15, 16, 17, 18, 19, 20
151752	Screw, 10-32 x 7 Hex 10, 13, 14, 15, 16, 17, 18, 19, 20
151753	Screw, 10-32 x 7 1/4 Hex 10, 13, 14, 15, 16, 17, 18, 19, 20
151754	Screw, 10-32 x 7 1/2 Hex 10, 13, 14, 15, 16, 17, 18, 19, 20
151755	Screw, 10-32 x 7 3/4 Hex 10, 13, 14, 15, 16, 17, 18, 19, 20
151756	Screw, 10-32 x 8 Hex 10, 13, 14, 15, 16, 17, 18, 19, 20
151757	Screw, 10-32 x 8 1/4 Hex 10, 13, 14, 15, 16, 17, 18, 19, 20
151758	Screw, 10-32 x 8 1/2 Hex 10, 13, 14, 15, 16, 17, 18, 19, 20
151759	Screw, 10-32 x 8 3/4 Hex 10, 13, 14, 15, 16, 17, 18, 19, 20
151760	Screw, 10-32 x 9 Hex 10, 13, 14, 15, 16, 17, 18, 19, 20
151761	Screw, 10-32 x 9 1/4 Hex 10, 13, 14, 15, 16, 17, 18, 19, 20
151762	Screw, 10-32 x 9 1/2 Hex 10, 13, 14, 15, 16, 17, 18, 19, 20
151763	Screw, 10-32 x 9 3/4 Hex 10, 13, 14, 15, 16, 17, 18, 19, 20
151764	Screw, 10-32 x 10 Hex 10, 13, 14, 15, 16, 17, 18, 19, 20
151765	Screw, 10-32 x 10 1/4 Hex 10, 13, 14, 15, 16, 17, 18, 19, 20
151766	Screw, 10-32 x 10 1/2 Hex 10, 13, 14, 15, 16, 17, 18, 19, 20
151767	Screw, 10-32 x 10 3/4 Hex 10, 13, 14, 15, 16, 17, 18, 19, 20
151768	Screw, 10-32 x 11 Hex 10, 13, 14, 15, 16, 17, 18, 19, 20
151769	Screw, 10-32 x 11 1/4 Hex 10, 13, 14, 15, 16, 17, 18, 19, 20
151770	Screw, 10-32 x 11 1/2 Hex 10, 13, 14, 15, 16, 17, 18, 19, 20
151771	Screw, 10-32 x 11 3/4 Hex 10, 13, 14, 15, 16, 17, 18, 19, 20
151772	Screw, 10-32 x 12 Hex 10, 13, 14, 15, 16, 17, 18, 19, 20
151773	Screw, 10-32 x 12 1/4 Hex 10, 13, 14, 15, 16, 17, 18, 19, 20
151774	Screw, 10-32 x 12 1/2 Hex 10, 13, 14, 15, 16, 17, 18, 19, 20
151775	Screw, 10-32 x 12 3/4 Hex 10, 13, 14, 15, 16, 17, 18, 19, 20
151776	Screw, 10-32 x 13 Hex 10, 13, 14, 15, 16, 17, 18, 19, 20
151777	Screw, 10-32 x 13 1/4 Hex 10, 13, 14, 15, 16, 17, 18, 19, 20
151778	Screw, 10-32 x 13 1/2 Hex 10, 13, 14, 15, 16, 17, 18, 19, 20
151779	Screw, 10-32 x 13 3/4 Hex 10, 13, 14, 15, 16, 17, 18, 19, 20
151780	Screw, 10-32 x 14 Hex 10, 13, 14, 15, 16, 17, 18, 19, 20
151781	Screw, 10-32 x 14 1/4 Hex 10, 13, 14, 15, 16, 17, 18, 19, 20
151782	Screw, 10-32 x 14 1/2 Hex 10, 13, 14, 15, 16, 17, 18, 19, 20
151783	Screw, 10-32 x 14 3/4 Hex 10, 13, 14, 15, 16, 17, 18, 19, 20
151784	Screw, 10-32 x 15 Hex 10, 13, 14, 15, 16, 17, 18, 19, 20
151785	Screw, 10-32 x 15 1/4 Hex 10, 13, 14, 15, 16, 17, 18, 19, 20
151786	Screw, 10-32 x 15 1/2 Hex 10, 13, 14, 15, 16, 17, 18, 19, 20
151787	Screw, 10-32 x 15 3/4 Hex 10, 13, 14, 15, 16, 17, 18, 19, 20
151788	Screw, 10-32 x 16 Hex 10, 13, 14, 15, 16, 17, 18, 19, 20
151789	Screw, 10-32 x 16 1/4 Hex 10, 13, 14, 15, 16, 17, 18, 19, 20
151790	Screw, 10-32 x 16 1/2 Hex 10, 13, 14, 15, 16, 17, 18, 19, 20
151791	Screw, 10-32 x 16 3/4 Hex 10, 13, 14, 15, 16, 17, 18, 19, 20
151792	Screw, 10-32 x 17 Hex 10, 13, 14, 15, 16, 17, 18, 19, 20
151793	Screw, 10-32 x 17 1/4 Hex 10, 13, 14, 15, 16, 17, 18, 19, 20
151794	Screw, 10-32 x 17 1/2 Hex 10, 13, 14, 15, 16, 17, 18, 19, 20
151795	Screw, 10-32 x 17 3/4 Hex 10, 13, 14, 15, 16, 17, 18, 19, 20
151796	Screw, 10-32 x 18 Hex 10, 13, 14, 15, 16, 17, 18, 19, 20
151797	Screw, 10-32 x 18 1/4 Hex 10, 13, 14, 15, 16, 17, 18, 19, 20
151798	Screw, 10-32 x 18 1/2 Hex 10, 13, 14, 15, 16, 17, 18, 19, 20
151799	Screw, 10-32 x 18 3/4 Hex 10, 13, 14, 15, 16, 17, 18, 19, 20
151800	Screw, 10-32 x 19 Hex 10, 13, 14, 15, 16, 17, 18, 19, 20
151801	Screw, 10-32 x 19 1/4 Hex 10, 13, 14, 15, 16, 17, 18, 19, 20
151802	Screw, 10-32 x 19 1/2 Hex 10, 13, 14, 15, 16, 17, 18, 19, 20
151803	Screw, 10-32 x 19 3/4 Hex 10, 13, 14, 15, 16, 17, 18, 19, 20
151804	Screw, 10-32 x 20 Hex 10, 13, 14, 15, 16, 17, 18, 19, 20
151805	Screw, 10-32 x 20 1/4 Hex 10, 13, 14, 15, 16, 17, 18, 19, 20
151806	Screw, 10-32 x 20 1/2 Hex 10, 13, 14, 15, 16, 17, 18, 19, 20
151807	Screw, 10-32 x 20 3/4 Hex 10, 13, 14, 15, 16, 17, 18, 19, 20
151808	Screw, 10-32 x 21 Hex 10, 13, 14, 15, 16, 17, 18, 19, 20
151809	Screw, 10-32 x 21 1/4 Hex 10, 13, 14, 15, 16, 17, 18, 19, 20
151810	Screw, 10-32 x 21 1/2 Hex 10, 13, 14, 15, 16, 17, 18, 19, 20
151811	Screw, 10-32 x 21 3/4 Hex 10, 13, 14, 15, 16, 17, 18, 19, 20
151812	Screw, 10-32 x 22 Hex 10, 13, 14, 15, 16, 17, 18, 19, 20
151813	Screw, 10-32 x 22 1/4 Hex 10, 13, 14, 15, 16, 17, 18, 19, 20
151814	Screw, 10-32 x 22 1/2 Hex 10, 13, 14, 15, 16, 17, 18, 19, 20
151815	Screw, 10-32 x 22 3/4 Hex 10, 13, 14, 15, 16, 17, 18, 19, 20
151816	Screw, 10-32 x 23 Hex 10, 13, 14, 15, 16, 17, 18, 19, 20
151817	Screw, 10-32 x 23 1/4 Hex 10, 13, 14, 15, 16, 17, 18, 19, 20
151818	Screw, 10-32 x 23 1/2 Hex 10, 13, 14, 15, 16, 17, 18, 19, 20
151819	Screw, 10-32 x 23 3/4 Hex 10, 13, 14, 15, 16, 17, 18, 19, 20
151820	Screw, 10-32 x 24 Hex 10, 13, 14, 15, 16, 17, 18, 19, 20
151821	Screw, 10-32 x 24 1/4 Hex 10, 13, 14, 15, 16, 17, 18, 19, 20
151822	Screw, 10-32 x 24 1/2 Hex 10, 13, 14, 15, 16, 17, 18, 19, 20
151823	Screw, 10-32 x 24 3/4 Hex 10, 13, 14, 15, 16, 17, 18, 19, 20
151824	Screw, 10-32 x 25 Hex 10, 13, 14, 15, 16, 17, 18, 19, 20
151825	Screw, 10-32 x 25 1/4 Hex 10, 13, 14, 15, 16, 17, 18, 19, 20
151826	Screw, 10-32 x 25 1/2 Hex 10, 13, 14, 15, 16, 17, 18, 19, 20
151827	Screw, 10-32 x 25 3/4 Hex 10, 13, 14, 15, 16, 17, 18, 19, 20
151828	Screw, 10-32 x 26 Hex 10, 13, 14, 15, 16, 17, 18, 19, 20
151829	Screw, 10-32 x 26 1/4 Hex 10, 13, 14, 15, 16, 17, 18, 19, 20
151830	Screw, 10-32 x 26 1/2 Hex 10, 13, 14, 15, 16, 17, 18, 19, 20
151831	Screw, 10-32 x 26 3/4 Hex 10, 13, 14, 15, 16, 17, 18, 19, 20
151832	Screw, 10-32 x 27 Hex 10, 13, 14, 15, 16, 17, 18, 19, 20
151833	Screw, 10-32 x 27 1/4 Hex 10, 13, 14, 15, 16, 17, 18, 19, 20
151834	Screw, 10-32 x 27 1/2 Hex 10, 13, 14, 15, 16, 17, 18, 19, 20
151835	Screw, 10-32 x 27 3/4 Hex 10, 13, 14, 15, 16, 17, 18, 19, 20
151836	Screw, 10-32 x 28 Hex 10, 13, 14, 15, 16, 17, 18, 19, 20
151837	Screw, 10-32 x 28 1/4 Hex 10, 13, 14, 15, 16, 17, 18, 19, 20
151838	Screw, 10-32 x 28 1/2 Hex 10, 13, 14, 15, 16, 17, 18, 19, 20
151839	Screw, 10-32 x 28 3/4 Hex 10, 13, 14, 15, 16, 17, 18, 19, 20
151840	Screw, 10-32 x 29 Hex 10, 13, 14, 15, 16, 17, 18, 19, 20
151841	Screw, 10-32 x 29 1/4 Hex 10, 13, 14, 15, 16, 17, 18, 19, 20
151842	Screw, 10-32 x 29 1/2 Hex 10, 13, 14, 15, 16, 17, 18, 19, 20
151843	Screw, 10-32 x 29 3/4 Hex 10, 13, 14, 15, 16, 17, 18, 19, 20
151844	Screw, 10-32 x 30 Hex 10, 13, 14, 15, 16, 17, 18, 19, 20
151845	Screw, 10-32 x 30 1/4 Hex 10, 13, 14, 15, 16, 17, 18, 19, 20
151846	Screw, 10-32 x 30 1/2 Hex 10, 13, 14, 15, 16, 17, 18, 19, 20
151847	Screw, 10-32 x 30 3/4 Hex 10, 13, 14, 15, 16, 17, 18, 19, 20
151848	Screw, 10-32 x 31 Hex 10, 13, 14, 15, 16, 17, 18, 19, 20
151849	Screw, 10-32 x 31 1/4 Hex 10, 13, 14, 15, 16, 17, 18, 19, 20
151850	Screw, 10-32 x 31 1/2 Hex 10, 13, 14, 15, 16, 17, 18, 19, 20
151851	Screw, 10-32 x 31 3/4 Hex 10, 13, 14, 15, 16, 17, 18, 19, 20
151852	Screw, 10-32 x 32 Hex 10, 13, 14, 15, 16, 17, 18, 19, 20
151853	Screw, 10-32 x 32 1/4 Hex 10, 13, 14, 15, 16, 17, 18, 19, 20
151854	Screw, 10-32 x 32 1/2 Hex 10, 13, 14, 15, 16, 17, 18, 19, 20
151855	Screw, 10-32 x 32 3/4 Hex 10, 13, 14, 15, 16, 17, 18, 19, 20
151856	Screw, 10-32 x 33 Hex 10, 13, 14, 15, 16, 17, 18, 19, 20
151857	Screw, 10-32 x 33 1/4 Hex 10, 13, 14, 15, 16, 17, 18, 19, 20
151858	Screw, 10-32 x 33 1/2 Hex 10, 13, 14, 15, 16, 17, 18, 19, 20
151859	Screw, 10-32 x 33 3/4 Hex 10, 13, 14, 15, 16, 17, 18, 19, 20
151860	Screw, 10-32 x 34 Hex 10, 13, 14, 15, 16, 17, 18, 19, 20
151861	Screw, 10-32 x 34 1/4 Hex 10, 13, 14, 15, 16, 17, 18, 19, 20
151862	Screw, 10-32 x 34 1/2 Hex 10, 13, 14, 15, 16, 17, 18, 19, 20
151863	Screw, 10-32 x 34 3/4 Hex 10, 13, 14, 15, 16, 17, 18, 19, 20
151864	Screw, 10-32 x 35 Hex 10, 13, 14, 15, 16, 17, 18, 19, 20
151865	Screw, 10-32 x 35 1/4 Hex 10, 13, 14, 15, 16, 17, 18, 19, 20
151866	Screw, 10-32 x 35 1/2 Hex 10, 13, 14, 15, 16, 17, 18, 19, 20
151867	Screw, 10-32 x 35 3/4 Hex 10, 13, 14, 15, 16, 17, 18, 19, 20
151868	Screw, 10-32 x 36 Hex 10, 13, 14, 15, 16, 17, 18, 19, 20
151869	Screw, 10-32 x 36 1/4 Hex 10, 13, 14, 15, 16, 17, 18, 19, 20
151870	Screw, 10-32 x 36 1/2 Hex 10, 13, 14, 15, 16, 17, 18, 19, 20
151871	Screw, 10-32 x 36 3/4 Hex 10, 13, 14, 15, 16, 17, 18, 19, 20
151872	Screw, 10-32 x 37 Hex 10, 13, 14, 15, 16, 17, 18, 19, 20
151873	Screw, 10-32 x 37 1/4 Hex 10, 13, 14, 15, 16, 17, 18, 19, 20
151874	Screw, 10-32 x 37 1/2 Hex 10, 13, 14, 15, 16, 17, 18, 19, 20
151875	Screw, 10-32 x 37 3/4 Hex 10, 13, 14, 15, 16, 17, 18, 19, 20
151876	Screw, 10-32 x 38 Hex 10, 13, 14, 15, 16, 17, 18, 19, 20
151877	Screw, 10-32 x 38 1/4 Hex 10, 13, 14, 15, 16, 17, 18, 19, 20
151878	Screw, 10-32 x 38 1/2 Hex 10, 13, 14, 15, 16, 17, 18, 19, 20
151879	Screw, 10-32 x 38 3/4 Hex 10, 13, 14, 15, 16, 17, 18, 19, 20
151880	Screw, 10-32 x 39 Hex 10, 13, 14, 15, 16, 17, 18, 19, 20
151881	Screw, 10-32 x 39 1/4 Hex 10, 13, 14, 15, 16, 17, 18, 19, 20
151882	Screw, 10-32 x 39 1/2 Hex 10, 13, 14, 15, 16, 17, 18, 19, 20
151883	Screw, 10-32 x 39 3/4 Hex 10, 13, 14, 15, 16, 17, 18, 19, 20
151884	Screw, 10-32 x 40 Hex 10, 13, 14, 15, 16, 17, 18, 19, 20
151885	Screw, 10-32 x 40 1/4 Hex 10, 13, 14, 15, 16, 17, 18, 19, 20
151886	Screw, 10-32 x 40 1/2 Hex 10, 13, 14, 15, 16, 17, 18, 19, 20
151887	Screw, 10-32 x 40 3/4 Hex 10, 13, 14, 15, 16, 17, 18, 19, 20
151888	Screw, 10-32 x 41 Hex 10, 13, 14, 15, 16, 17, 18, 19, 20
151889	Screw, 10-32 x 41 1/4 Hex 10, 13, 14, 15, 16, 17, 18, 19, 20
151890	Screw, 10-32 x 41 1/2 Hex 10, 13, 14, 15, 16, 17, 18, 19, 20
151891	Screw, 10-32 x 41 3/4 Hex 10, 13, 14, 15, 16, 17, 18, 19, 20
151892	Screw, 10-32 x 42 Hex 10, 13, 14, 15, 16, 17, 18, 19, 20
151893	Screw, 10-32 x 42 1/4 Hex 10, 13, 14, 15, 16, 17, 18, 19, 20
151894	Screw, 10-32 x 42 1/2 Hex 10, 13, 14, 15, 16, 17, 18, 19, 20
151895	Screw, 10-32 x 42 3/4 Hex 10, 13, 14, 15, 16, 17, 18, 19, 20
151896	Screw, 10-32 x 43 Hex 10, 13, 14, 15, 16, 17, 18, 19, 20
151897	Screw, 10-32 x 43 1/4 Hex 10, 13, 14, 15, 16, 17, 18, 19, 20
151898	Screw, 10-32 x 43 1/2 Hex 10, 13, 14, 15, 16, 17, 18, 19, 20
151899	Screw, 10-32 x 43 3/4 Hex 10, 13, 14, 15, 16, 17, 18, 19, 20
151900	Screw, 10-32 x 44 Hex 10, 13, 14, 15, 16, 17, 18, 19, 20
151901	Screw, 10-32 x 44 1/4 Hex 10, 13, 14, 15, 16, 17, 18, 19, 20
151902	Screw, 10-32 x 44 1/2 Hex 10, 13, 14, 15, 16, 17, 18, 19, 20
151903	Screw, 10-32 x 44 3/4 Hex 10, 13, 14, 15, 16, 17, 18, 19, 20
151904	Screw, 10-32 x 45 Hex 10, 13, 14, 15, 16, 17, 18, 19, 20
151905	Screw, 10-32 x 45 1/4 Hex 10, 13, 14, 15, 16, 17, 18, 19, 20
151906	Screw, 10-32 x 45 1/2 Hex 10, 13, 14, 15, 16, 17, 18, 19, 20
151907	Screw, 10-32 x 45 3/4 Hex 10, 13, 14, 15, 16, 17, 18, 19, 20
151908	Screw, 10-32 x 46 Hex 10, 13, 14, 15, 16, 17, 18, 19, 20
151909	Screw, 10-32 x 46 1/4 Hex 10, 13, 14, 15, 16, 17, 18, 19, 20
151910	Screw, 10-32 x 46 1/2 Hex 10, 13, 14, 15, 16, 17, 18, 19, 20
151911	Screw, 10-32 x 46 3/4 Hex 10, 13, 14, 15, 16, 17, 18, 19, 20
151912	Screw, 10-32 x 47 Hex 10, 13, 14, 15, 16, 17, 18, 19, 20
151913	Screw, 10-32 x 47 1/4 Hex 10, 13, 14, 15, 16, 17, 18, 19, 20
151914	Screw, 10-32 x 47 1/2 Hex 10, 13, 14, 15, 16, 17, 18, 19, 20
151915	Screw, 10-32 x 47 3/4 Hex 10, 13, 14, 15, 16, 17, 18, 19, 20
151916	Screw, 10-32 x 48 Hex 10, 13, 14, 15, 16, 17, 18, 19, 20
151917	Screw, 10-32 x 48 1/4 Hex 10, 13, 14, 15, 16, 17, 18, 19, 20
151918	Screw, 10-32 x 48 1/2 Hex 10, 13, 14, 15, 16, 17, 18, 19, 20
151919	Screw, 10-32 x 48 3/4 Hex 10, 13, 14, 15, 16, 17, 18, 19, 20
151920	Screw, 10-32 x 49 Hex 10, 13, 14, 15, 16, 17, 18, 19, 20
151921	Screw, 10-32 x 49 1/4 Hex 10, 13, 14, 15, 16, 17, 18, 19, 20
151922	Screw, 10-32 x 49 1/2 Hex 10, 13, 14, 15, 16, 17, 18, 19, 20
151923	Screw, 10-32 x 49 3/4 Hex 10, 13, 14, 15, 16, 17, 18, 19, 20
151924	Screw, 10-32 x 50 Hex 10, 13, 14, 15, 16, 17, 18, 19, 20
151925	Screw, 10-32 x 50 1/4 Hex 10, 13, 14, 15, 16, 17, 18, 19, 20
151926	Screw, 10-32 x 50 1/2 Hex 10, 13, 14, 15, 16, 17, 18, 19, 20
151927	Screw, 10-32 x 50 3/4 Hex 10, 13, 14, 15, 16, 17, 18, 19, 20
151928	Screw, 10-32 x 51 Hex 10, 13, 14, 15, 16, 17, 18, 19, 20
151929	Screw, 10-32 x 51 1/4 Hex 10, 13, 14, 15, 16, 17, 18, 19, 20
151930	Screw, 10-32 x 51 1/2 Hex 10, 13, 14, 15, 16, 17, 18, 19, 20
151931	Screw, 10-32 x 51 3/4 Hex 10, 13, 14, 15, 16, 17, 18, 19, 20
151932	Screw, 10-32 x 52 Hex 10, 13, 14, 15, 16, 17, 18, 19, 20
151933	Screw, 10-32 x 52 1/4 Hex 10, 13, 14, 15, 16, 17, 18, 19, 20
151934	Screw, 10-32 x 52 1/2 Hex 10, 13, 14, 15, 16, 17, 18, 19, 20
151935	Screw, 10-32 x 52 3/4 Hex 10, 13, 14, 15, 16, 17, 18, 19, 20
151936	Screw, 10-32 x 53 Hex 10, 13, 14, 15, 16, 17, 18, 19, 20
151937	Screw, 10-32 x 53 1/4 Hex 10, 13, 14, 15, 16, 17, 18, 19, 20
151938	Screw, 10-32 x 53 1/2 Hex 10, 13, 14, 15, 16, 17, 18, 19, 20
151939	Screw, 10-32 x 53 3/4 Hex 10, 13, 14, 15, 16, 17, 18, 19, 20
151940	Screw, 10-32 x 54 Hex 10, 13, 14, 15, 16, 17, 18, 19, 20
151941	Screw, 10-32 x 54 1/4 Hex 10, 13, 14, 15, 16, 17, 18, 19, 20
151942	Screw, 10-32 x 54 1/2 Hex 10, 13, 14, 15, 16, 17, 18, 19, 20
151943	Screw, 10-32 x 54 3/4 Hex 10, 13, 14, 15, 16, 17, 18, 19, 20
151944	Screw, 10-32 x 55 Hex 10, 13, 14, 15, 16, 17, 18, 19, 20
151945	Screw, 10-32 x 55 1/4 Hex 10, 13, 14, 15, 16, 17, 18, 19, 20
151946	Screw, 10-32 x 55 1/2 Hex 10, 13, 14, 15, 16, 17, 18, 19, 20
151947	Screw, 10-32 x 55 3/4 Hex 10, 13, 14, 15, 16, 17, 18, 19, 20
151948	Screw, 10-32 x 56 Hex 10, 13, 14, 15, 16, 17, 18, 19, 20
151949	Screw, 10-32 x 56 1/4 Hex 10, 13, 14, 15, 16, 17, 18, 19, 20
151950	Screw, 10-32 x 56 1/2 Hex 10, 13, 14, 15, 16, 17, 18, 19, 20
151951	Screw, 10-32 x 56 3/4 Hex 10, 13, 14, 15, 16, 17, 18, 19, 20
151952	Screw, 10-32 x 57 Hex 10, 13, 14, 15, 16, 17, 18, 19, 20
151953	Screw, 10-32 x 57 1/4 Hex 10, 13, 14, 15, 16, 17, 18, 19, 20
151954	Screw, 10-32 x 57 1/2 Hex 10, 13, 14, 15, 16, 17, 18, 19, 20
151955	Screw, 10-32 x 57 3/4 Hex 10, 13, 14, 15, 16, 17, 18, 19, 20
151956	Screw, 10-32 x 58 Hex 10, 13, 14, 15, 16, 17, 18, 19, 20
151957	Screw, 10-32 x 58 1/4 Hex 10, 13, 14, 15, 16, 17, 18, 19, 20
151958	Screw, 10-32 x 58 1/2 Hex 10, 13, 14, 15, 16, 17, 18, 19, 20
151959	Screw, 10-32 x 58 3/4 Hex 10, 13, 14, 15, 16, 17, 18, 19, 20
151960	Screw, 10-32 x 59 Hex 10, 13, 14, 15, 16, 17, 18, 19, 20
151961	Screw, 10-32 x 59 1/4 Hex 10, 13, 14, 15, 16, 17, 18, 19, 20
151962	Screw, 10-32 x 59 1/2 Hex 10, 13, 14, 15, 16, 17, 18, 19, 20
151963	Screw, 10-32 x 59 3/4 Hex 10, 13, 14, 15, 16, 17, 18, 19, 20
151964	Screw, 10-32 x 60 Hex 10, 13, 14, 15, 16, 17, 18, 19, 20
151965	Screw, 10-32 x 60 1/4 Hex 10, 13, 14, 15, 16, 17, 18, 19, 20
151966	Screw, 10-32 x 60 1/2 Hex 10, 13, 14, 15, 16, 17, 18, 19, 20
151967	Screw, 10-32 x 60 3/4 Hex 10, 13, 14, 15, 16, 17, 18, 19, 20
151968	Screw, 10-32 x 61 Hex 10, 13, 14, 15, 16, 17, 18, 19, 20
151969	Screw, 10-32 x 61 1/4 Hex 10, 13, 14, 15, 16, 17, 18, 19, 20
151970	Screw, 10-32 x 61 1/2 Hex 10, 13, 14, 15, 16, 17, 18, 19, 20
151971	Screw, 10-32 x 61 3/4 Hex 10, 13, 14, 15, 16, 17, 18, 19, 20
151972	Screw, 10-32 x 62 Hex 10, 13, 14, 15, 16, 17, 18, 19, 20
151973	Screw, 10-32 x 62 1/4 Hex 10, 13, 14, 15, 16, 17, 18, 19, 20
151974	Screw, 10-32 x 62 1/2 Hex 10, 13, 14, 15, 16, 17, 18, 19, 20
151975	Screw, 10-32 x 62 3/4 Hex 10, 13, 14, 15, 16, 17, 18, 19, 20
151976	Screw, 10-32 x 63 Hex 10, 13, 14, 15, 16, 17, 18, 19, 20
151977	Screw, 10-32 x 63 1/4 Hex 10, 13, 14, 15, 16, 17, 18, 19, 20
151978	Screw, 10-32 x 63 1/2 Hex 10, 13, 14, 15, 16, 17, 18, 19, 20
151979	Screw, 10-32 x 63 3/4 Hex 10, 13, 14, 15, 16, 17, 18, 19, 20
151980	Screw, 10-32 x 64 Hex 10, 13, 14, 15, 16, 17, 18, 19, 20
151981	Screw, 10-32 x 64 1/4 Hex 10, 13, 14, 15, 16, 17, 18, 19, 20
151982	Screw, 10

SECTION 573-126-802C

NUMERICAL INDEX (Continued)

Part Number	Description and Page Number
130207	Transformer Assembly 20
130217	Insulator, Switch 54
130218	Cable 54
130220	Screw, 4-40 Flat Hd. 75
130240	Clamp, Bearing 13
130891	Capacitor, 15 MFD 27, 32, 33
130892	Bracket, Mounting 27, 32, 33
139238	Connector, 2 Pr Receptacle Assembly 20
139931	Clamp 28
139932	Keeper 28
140429	Plate, Mounting 40, 41
140841*	Hinge, Left 19
140841**	Hinge, Left 19
140842*	Hinge, Right 19
140842**	Hinge, Right Suburban 23, 45
140929	Spring, Contact 19
140987	Insulator, Terminal 30, 36
141238	Connector, 34 Pr Receptacle 35, 36
141239	Connector, 34 Pr Plug 36, 45
141480	Channel, Rail 8
141484	Channel, Right 8
141591	Clamp 28
141705	Strike, Retainer 4, 6
141706*	Door, Right Rear 6
141707**	Door, Left Rear 6
141708	Screw, Flat Hd. 4
141711	Hook, Center 7, 8, 18
141712	Channel, Right 7
141716	Block, Support 7, 8, 18
141721	Plate, Cover 8
141747	Plate, Hat 4, 5, 6
141748	Screw, 1/2-18 x 5/8 Flat S. 4, 5, 6
141752	Channel, Door 5
141986	Cover, Door 5
141987	Plate, Door 5
141988	Bracket, Terminal Block 10
141989	Bracket, Terminal Block 10
141990	Plate, Tailstyle Name 4, 5
142253	Rail, Leveling 11, 12, 14
142257	Capacitor, 500 MFD 40
142258	Cleat 40, 41
142259	Transformer, Power 40
142260	Rectifier Assembly 40
142261	Rectifier Assembly 2, 39, 40
142267	Nut, #5 Speed 4, 5
142268	Screw, 1-1/2 Sel. 4, 5
142269	Washer, #5 Flat 4
142270	Screw, Hexhd.-7/16 Hex 4
142271	Screw, Hexnut 45
142343	Rod 5
142344	Gear, #27 15
142345	Gear, #27 15
142873	Plate, Hat 7
142881	Spacer, .375" Thk. 5
142882	Cleat 5
142888	Pan Assembly 2, 8
142924	Door Assembly, Intermediate 2, 12
144573	Rod 33
144574	Bracket, Right 17
144575	Bracket, Left 17
144684	Bracket, Mounting 10
144687	Bracket, Mounting 10

Part Number	Description and Page Number
144689	Plate, Identification 3
144693	Brace 18
144694	Bracket, Right Mounting 18
144695	Bracket, Left Mounting 18
144813	Plate, Brace 18
144814	Brace 18
144815	Brace, Paper Winder 14, 46, 47
144818	Handle 13
144819	Bracket, Mounting 40
144820	Guide, Terminal Board 10
144822	Bracket 13
144823	Bracket, Right Mounting 13
144824	Cable Assembly 3, 10
144826	Holder, Wire 10
144827	Holder, Right Lamp 13
144828	Holder, Left Lamp 13
144829	Plate, Adjuster 13
144879	Bracket, Mounting 13, 46, 47
144922	Hub, Wheel 46
144923	Wheel, Driver 46
144924	Pulley 46
144925	Pulley, Idler 46
144926	Pad, Idler 46
144927	Lever, Idler 46
144928	Rod, Idler Lever 46
144929	Bracket w/Bearing 46
144930	Bracket 13, 46
144931	Cleat 46
144932	Extension 46
144933	Shield, Left Lamp 18
144934	Belt, 1/2" Wide 46
144935	Coupling, Flexible 46
144940	Pad, Side Tube 2
144941	Pad, Side Bottom 2
144942	Pad, Side Top 2
144943	Pad, Side Center 2
144963	Pad, Rear Top 3, 4
144965	Modification Kit 2, 46
144977	Cable w/Terminals 10
144978	Cable, Ground 10
144979	Cable, Ground 10
144980	Cable, Left 10
144981	Cable w/Terminals 10
144983	Screw, 12-24 x 5/8 Rd. Hd. 27, 29 to 32, 38
144518	Socket, Lamp 33
144519	Socket, Lamp 33
144568	Key 33
144581	Screw, 4-40 x 3/8 Oval Hd. 33, 56
144582	Screw 33
144703	Rectifier Assembly 2, 30, 34, 36
144704	Capacitor, 40 MFD 44
144761	Capacitor, 40 MFD 44
144763	Resistor, 1 Ohm 44
144769	Diode 42
144770	Transformer 44
171644	Fuse, 1.5 Amp 44
171645	Connector, 2 Pr Receptacle 44
171692	Connector, Green Stabilizer 45
171972	Connector, Green Insulated 45
172037	Connector, Black Insulated 45
172080	Stile, Left Top Outer 19
172081	Stile, Right Top Outer 19
172082	Stile, Left Center Outer 19
172083	Stile, Right Center Outer 19
172084	Stile, Right Bottom Outer 19

Part Number	Description and Page Number
172089	Stile, Left Bottom Outer 19
172085	Stile, Left Middle Outer 19
172086	Stile, Right Middle Outer 19
172088	Stile, Right Inner 19, 34, 18
172087	Stile, Left Inner 19
172090**	Panel, Right Side 2
172091**	Panel, Left Side 2
172095	Screw 3
172096*	Screw, Front Bottom 3
172096**	Screw, Front Top 3
172098**	Screw, Rear Bottom 3, 4
172099**	Cover, Assembly 18
172100**	Door Assembly 2, 9
172101**	Trim 2
172102**	Panel, Rear 3, 4
172103**	Panel, Rear Top 3
172104**	Frame 3
172713	Plate, Cover 3
172714	Plate, Cover 3
172715	Arm, Left Door 9
172716	Arm, Right Door 9
172717	Screw, 10-24 Capstan 3, 9
172718	Bushing 9
172719	Screw, 1/4-20 Socket 9
172720	Screw, 1/4-20 Shoulder 9
172721	Pad, Door Frame 3, 4
172742	Bumper, Rubber 9
172743	Bumper 9
172744	Panel, Rear 3, 4
172761	Screw, 6-40 Hex 13
172037**	Frame, Top 9
172334**	Frame, Left 9
172335**	Frame, Right 9
172336**	Frame, Bottom 9
172337	Frame, Door 9
172338	Cleat 9
172339	Panel, Glass 9
172376	Transformer 44
172381	Tube, Vacuum 42
172382	Tube 42
172384	Plate, Left 20, 29
172384	Plate, Mounting 38, 39
172385	Screw, 10-32 x 5/16 Hex 11, 12
172386	Relay, 550 Ohm 35
172387	Plate, Hat 19
172388	Arm, Left Front 19
172389	Arm, Left Rear 19
172390	Arm, Right Front 19
172391	Arm, Right Rear 19
172392	Screw, Flat Hd. 19
172393	Lamp, 6V Incandescent 22
172394	Lamp, Incandescent 6V Cobber 22
172395	Hinge 19, 20, 34, 42
172396	Handle, Door 19
172397	Power Unit 49
172398	Box, Stella Eliminator 49
172399	Cable, Interior 49
172392	Plug, Outlet 49
172393	Capacitor, 40 MFD 43
172394	Transformer 43
172940	Plate, Mounting 43
172970	Cord, Circuit 43
172968	Resistor, 750 Ohm 43
172969	Cable w/Terminals 43
172988	Cleat 43
173370	Screw, 10-32 Shoulder 17
173371	Screw, 10-24 x 5/8 Rear. 4, 16

**Refer to Page 1 for Finish Suffix

NUMERICAL INDEX (Continued)

Part Number	Description and Page Number
179122	Collar, Spacing 9, 10
179126	Bracket, Eight
179165	Bracket, Eight Mounting 51, 53
179236	Bracket, Left Mounting 52
179237	Clamp, Left 51, 55
179238	Clamp, Right 51, 53
179239	Bracket, Right Mounting 51, 53
179240	Bracket, Left Mounting 51, 53
179241	Clamp, Left 51, 55
179297	Cover, Bottom 20
179297-1*	Cover, Middle & Top 20
179297-2*	Panel, Keyboard 21
179324	Bracket 21
179325	Bracket, Plastic 19, 20
179376	Clamp, Window 19, 20
179297	Bracket, Right 17, 21
179297	Bracket, Left 17, 21
179299-1*	Door w/Hinge 4
179299-2*	Frame, Outer 4
179301	Plate, Power Cable 50
179302	Plate, Rear 21
179304	Plate, Rear 21
179305-1*	Panel, Cover 21
179306	Plate, Identification 21, 23
179307	Panel, Mounting 21
179309	Finger, Left Rear 52
179310	Finger, Right Rear 52
179311	Plate 21
179347	Plate, Identification 21
179360	Roller, Paper Guide 30, 33
179362	Modification Kit 2, 32
179370	Lamp, Red Indicating 21
179371	Lamp, Green Indicating 21
179372	Switch, Paper 30, 33
179375	Panel, Mounting 21
179376	Clamp 19, 20
179378	Retainer, Keyboard 19, 20
179379	Screw, 10-24 x 7/16 in. 21
179540	Cord, Circuit 45
179541	Cable Assy, Power 45, 50
179594	Cover 21
181304	Washer, Flat 50
181306	Lockwr, 1/10 AC 36
181892	Sleeve, 5/64 ID x 1/8 in. Insulating 45
182016	Socket, Lamp 45
182214	Cap, Red Lens 21
182215	Cap, Red Lens 21
182267	Driver Assembly, Selector Magnet 2, 31, 37, 43
182270	Cover, Relay Panel 26
182271	Cover, Relay Panel 26
183536	Cable Assembly 26
183537	Cable Assembly 26
183538	Cable Assembly 26
183539	Cable Assembly 26
183540	Cable Assembly 26
183541	Cable Assembly 26
183542	Bracket, Left Front 26
183544	Bracket, Left Rear 26
183563	Panel, Red Plastic 24
183564	Panel, Yellow Plastic 24
183565	Panel, Green Plastic 24
183566	Panel, Designation 24
183569	Panel, Plastic 24
183570*	Panel 24

Part Number	Description and Page Number
193301	Bracket 16
193302	Modification Kit 2, 32
193303	Mounting Assembly, Selector Magnet Driver 2, 32, 37
193304	Relay 32
193375	Plate, Mounting 32
193377	Panel, Fixed Cover 32
193377	Clamp, 19, 20, 21
193378	Clamp, Left 19, 20
193379	Clamp, Right 19, 20
193380-1*	Cover w/Glass 5
193381-1*	Modification 2, 40
193382	Fan Assembly 48
193383	Fan Assembly 48
193384	Terminals, Fan Mounting 48
193522	Bracket 16
193523	Bracket 16
193524	Flange, Right 47
193525	Flange, Left 47
193594	Holder Assembly, Fuse 48
193595	Bracket, Fuse 48, 50
193596	Bracket, Fuse 48, 50
194226	Bracket, Switch 54
194227	Bracket 54
194346	Plate, Lamp Holder 22, 23
194362	Cable, Relay Mounting 37
194363	Driver Assembly, Selector Magnet 2, 31, 37
194370	Cable Assembly 43
194371	Guide 34
194372	Plate, Identification 22
194394*	Panel, Control 22
194395	Panel, Mounting 22
194396	Plate, Mounting 22
194397	Panel, Rear 22
194398	Panel, Rear 22
194399	Cable Assembly 23
194400	Cable Assembly 23
194800	Cable Assembly 29
194801	Cable Assembly 29
195197	Brace, Top Frame 47
195294	Plate Assembly, Right Mounting 5, 29
195295	Plate Assembly, Left Mounting 5, 29
195296	Cable Assembly 29
195297	Cable Assembly 46
195428	Shaft 46
195429	Shaft 46
195430	Cable, Relay 30
195531	Cable Assembly 44
195532	Cable Assembly 44
195611	Bracket, Mounting 49
195612	Bracket, Left 49, 50, 54
195921	Modification Kit 2, 47
195922	Modification Kit 2, 47
195932	Bracket 47
195933	Bracket 47
195934	Clip, Spring 47
195936	Insulator 47
195940	Grille 48
196931	Clip 48
196932	Cable Assembly 37
197064	Cable Assembly 37
198562	Motor, 115V AC 50 & 60 Cycle 47

Part Number	Description and Page Number
198590	Fan 48
198591	Panel, Rear 4
198592	Pad, Left 4
198593	Pad, Right 4
198594	Panel Assembly, Electrical Service 2, 34
198309	Plate, Mounting 34
198310	Modification Kit 2, 32
198311	Plate w/Reducer 34
198312	Mounting Assembly 32
198313	Wire, Fan 34
198314	Shaft, Gear 34
198318	Weight, Paper 50
198319	Bracket, Right 50
198320	Bracket, Left 50
198321	Bracket 50
198322	Stop, Cover 50
198323	Gillies, Cover 50
198324	Bracket, Switch 50
198325	Plate, Clutch 50
198326	Bracket, Motor Mounting 50
198328	Rack, Copy Display 51
198329	Bracket, Upper 51
198330	Guide, Upper 51
198331	Bracket 50
198332	Bracket w/Bearing 50
198333	Guide, Lower 50
198334	Bracket 50
198335	Stop, Paper Tray 50
198336	Bracket 50
198337	Bracket, Left Mounting 51
198338	Shaft 52
198339	Bar, Paper 52
198340	Spring 51
198341	Cable, Terminal 52
198342	Cable Assembly 52
198343	Cable 52
198344	Tray Assembly, Paper 52
198345	Shaft Assembly 52
198346	Shaft Assembly, Paper 52
198347	Plate Assembly 52
198348	Cable Assembly 52
198349	Connector, 10 Pt Circuit Card 42
199395	Shield, Connector Box 12
203556	Plate, Identification 4, 5, 18
203570	Part 47
203571	Part 47
203690	Bracket, Upper 11
203691	Bracket, Lower 11
203692	Bracket 11
203693	Modification Kit 11
203694	Bracket 11
206992	Clamp 15
206993	Clamp 15
206994	Clamp 15
206995	Spacer 15
207836*	Cover, Top 4
209843	Driver Assembly 2, 32, 39, 42
209845	Plate 42
209846	Cord, Circuit 42
209870	Bracket 42
209871	Shield, Vacuum Tube 42
209872	Shield, Vacuum Tube 42
210250	Panel Assembly, Electrical Service 2, 32
210254	Mounting Assembly, Selector Magnet Driver 2, 32, 39

* Indicates Part Has Finish Suffix

NUMERICAL INDEX (Continued)

Part Number	Description and Page Number
310489	Plate, Mounting 32
310490	Bracket, Mounting 27
310231	Rack Assembly, Mounting 2, 27
310232	Rack, Mounting 27
311329	Panel Assembly, Electrical Service 2, 23, 36
311223	Cable Assembly 35
311234	Cable Assembly 36
311235	Plate, Right 36
311236	Plate, Left 35
311237	Cover, Assembly 36
311241	Bracket, Left 35, 37
311242	Bracket, Right 36
311243	Rack Assembly 2, 26
311244**	Panel, Right Side 4
311245**	Panel, Left Side 4
311246**	Base, Cover Frame 4
311247**	Door 4
311249**	Cover, Bottom 19
311249	Plate, Bottom Adapter 17
311250	Pad, Pull 4
311252**	Frame 4
311254**	Panel 22
311255	Plate, Left 23
311256	Plate, Lamp 23
311257	Plate, Bottom 36
311259	Cover, Insulator 36
311260	Cover, Relay 23
311261	Jumper, 2" Green 26
311262	Jumper, 2" White 26
311263	Jumper, 2" White 26
311267**	Cover Assembly, Bottom 2, 19
311455	Guard, Gear 47
311500	Shield, Meter 30
312541	Transformer 41
312542	Rectifier Assembly 2, 33, 41
313096	Panel Assembly, Electrical Service 2, 23, 41
312601	Panel, Mounting 33
312698	Mounting Assembly, Selector Magnet Driver 2, 38
312809	Capacitor, 600 MFD 41
312701	Insulator 33
312702	Insulator, Terminal 33
312703	Strap, Terminal 33
312704	Container 38
312714**	Panel, Fixed Cover 22
312715	Plate, Identification 22
312716	Plate, Identification 22
312717	Plate, Identification 22
312847	Modification Kit 37
313848	Latch 17
317323	Bracket 41
317324	Cover 41
317325	Base 41
317314	Bracket, Channel 17
317319	Cable w/Terminals 41
317322	Post 41
320323	Spring 9
321525	Cover, Rectifier 44
321926	Cover 44

**Refer to Page 1 for Finish Suffix