NO.	NOTES
1.	WIRING LEGEND: —DISTANT TERMINATING AREA —DISTANT TERMINATING DESIGNATION A-2-G— COLOR CODE
2.	COLOR CODE: BK - BLACK, BL - BLUE, BR - BROWN, W - WHITE, O - ORANGE, R - RED, Y - YELLOW, P - PURPLE, S - SLATE, G - GREEN
3.	CONNECTORS VIEWED FROM SOLDER TERMINAL INDS.
4.	* 18 GA. WIRE ALL OTHER WIRE 24 Ga.
5.	THE NUMBERS ENCLOSED IN PARENTHESIS ARE FOR REFERENCE AND NOT SHOWN ON COMPONENTS.
6.	B TERMINAL DESIGNATIONS REFER TO THE B CONNECTOR ON THE LEXDBOI SEE 7336WD.
7.	ALL CONTACTS SHOWN IN UNOPERATED POSITION.
8.	REFER TO 320088 FOR CABLE ASSEMBLY.
9.	ASSOCIATED SCHEMATIC 7342WD.
10.	REFERENCE SPEC. FOR TELETYPE CORPORATION EMPLOYEES ONLY 61256 S.
11.	REFER TO 321908 FOR INTER CONNECTING CABLE BETWEEN CARD FEEDER AND CARD READER.

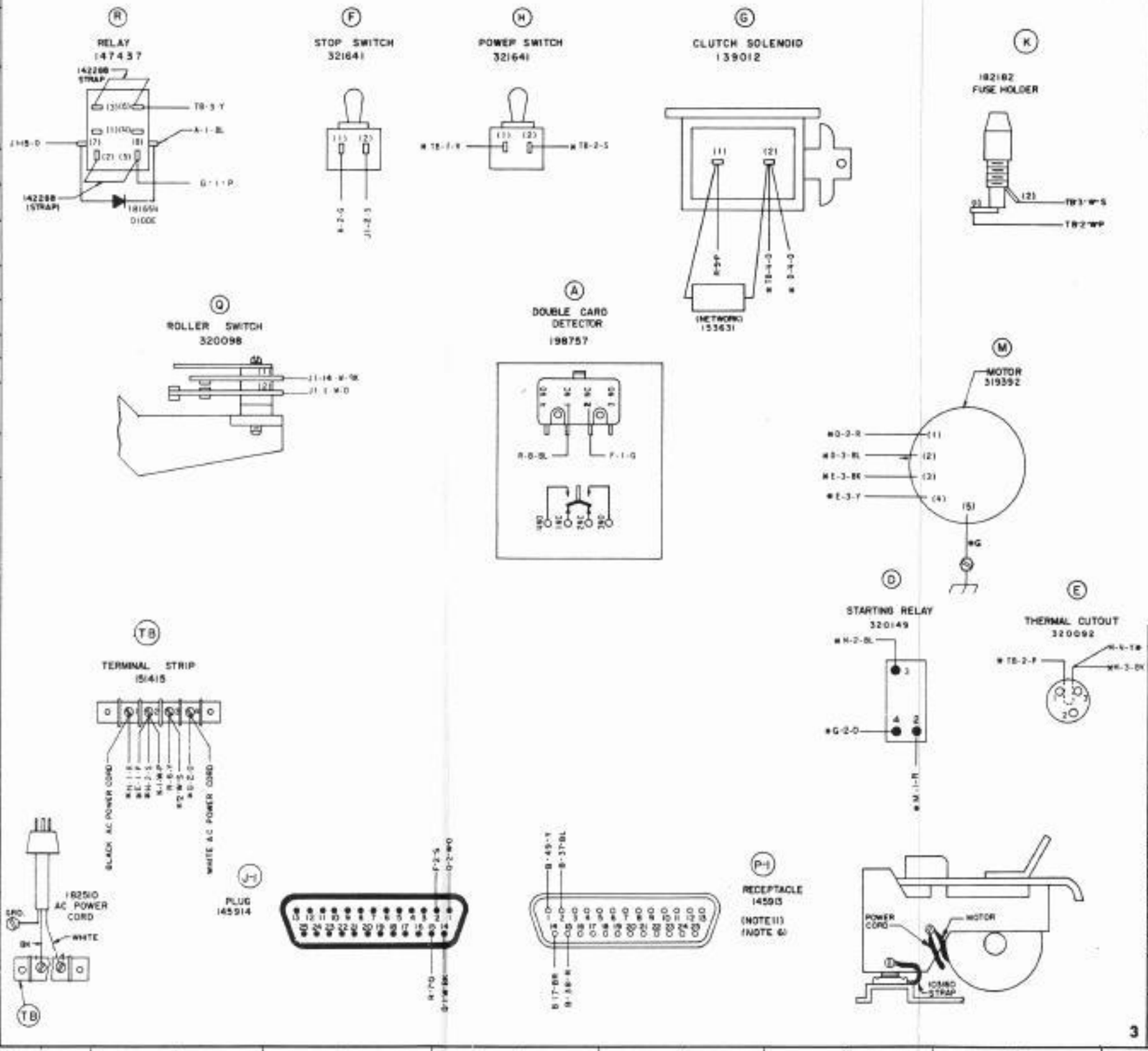

7341WD

REVISIONS		
ISSUE	DATE	AUTH. NO.
1	11-12-66	18024-R
2	5-18-67	93203
3	5-18-67	93203-1

ACTUAL WIRING DIAGRAM FOR AUTOMATIC CARD FEEDER EPCF 1

APPROVALS	
D AND R	E OF M

E-NUMBER

PROG. NO. 7341 WD

DATE 6-2-66

P.O. FILE NO. 10.58.6544

DRAWN R.A.L. CHKD.

ENGD. DJU APPD.

TELETYPE CORPORATION

3

7341WD