Copyright, 1957, by
American Telephone and Telegraph Company
Printed in U. S. A.

15 TYPE
TYPING UNIT AND KEYBOARD LUBRICATION CHARTS

1. GENERAL

1.01 This section gives Lubrication Charts for the 15 Teletypewriter Typing Unit and Keyboard.

1.02 This section supplements Section P36.601.

1.03 This section is reissued to cover changes in lubrication due to field experience and correct errors and omissions. ←

1.04 The symbols used in connection with the charts are as follows:

SYMBOLS

O - OIL
G - GREASE
GS - GREASE SPARINGLY ←
OGO - OIL-GREASE-OIL
OF - OIL FREELY
OH - OIL HOLE
OS - OIL SPARINGLY
OFC - OIL FILL CUP
ODR - ONE DROP (OIL) RUBBED

Fig. 1

1.05 The following points are not covered in the charts:

Typing Units

*2.01			Felt Washers, Wicks and Fibre Gears
*3.01	(b)	(26)	Ribbon feed shaft detent roller; bearings←
*3.01	(c)	(5)	Single double line feed lever
*3.01	(c)	(6)	Line feed pawl mounting screw
*3.01	(c)	(7)	Line feed operating lever ←
*3.01	(c)	(10)	Pressure roller release shaft
*3.01	(c)	(11)	Pressure roller release cam
*3.01	(c)	(12)	Shoulder screws—Pressure roller
*3.01	(c)	(19)	Paper spindle bearings
*3.01	(d)	(1)	Fill main shaft
*3.01	(d)	(8)	Prongs of inner friction disc of selector cam assembly
*3.01	(e)	(7)	Felt washers—selector cam assembly
*3.01	(e)	(9)	Receiving cam sleeve—peaks of cams
*3.01	(e)	(10)	Main clutch—throwout lever: two pivot← bearings
*3.01	(e)	(11)	Locking wedge—point of engagement with locking levers
*3.01	(g)	(2)	Bail shaft—bearings and between spacing pawl
*3.01	(g)	(3)	Bearings for function bail and printing bail operating arm
*3.01	(g)	(5)	Roller on printing bail arm
*3.01	(h)	(3)	Flat spring in slot of "lts" push bar
*3.01	(h)	(7)	Sixth vane detent lever roller
*3.01	(i)	(1)	Lower bearing oil cup of spacing shaft assembly
*3.01	(j)	(7)	Spacing stop lever and screw
*3.01	(m)	(1)	Figs. and lts. push bar shoulder screws
*3.01	(m)	(2)	Shift link mounting screws
*3.01	(m)	(3)	Joint between bell-crank lever and bell-crank operating lever
*3.01	(m)	(4)	Bell crank lever shoulder screw
*3.01	(p)		Sprocket feed mechanism (1), (2) and← (3) inclusive
*3.01	(q)		Tabulator mechanism (1) to (7) inclusive
*3.01	(r)		Shift Blanks stop mechanism (1)
*3.01	(s)		Remote signal bell contact mechanism (1) to (3) inclusive
*3.01	(t)		Word Counter operating mechanism (1) to (3) inclusive

Keyboards

*3.01 (u) (2) Universal bar pilot screw bearings

*3.01 (v) (6) Contact lever pivots shaft and guiding comb

*3.01 (v) (10) Repeat space rod

* Refer to paragraphs in Bell System Practice Section P36.601.

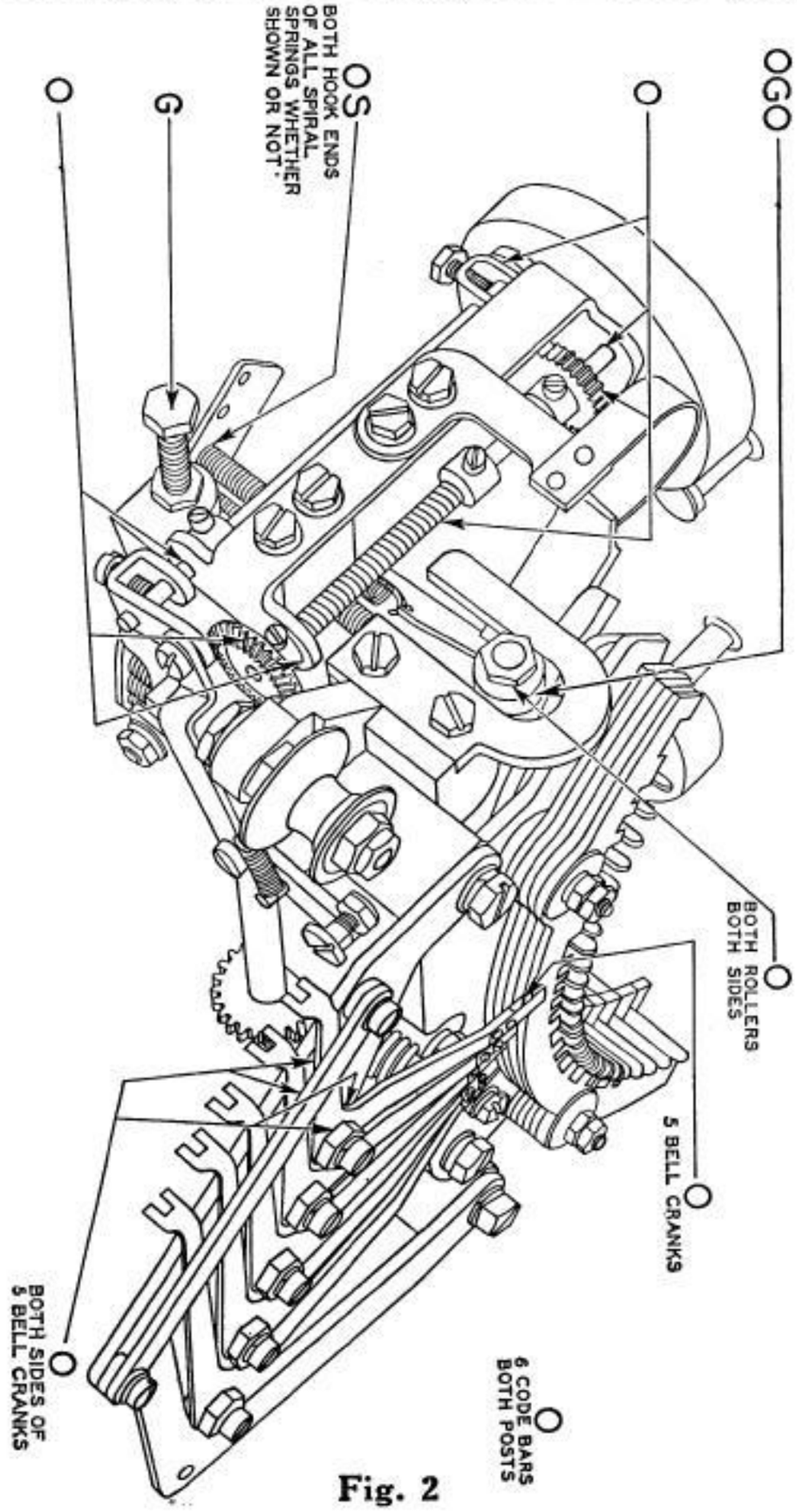

Fig. 2

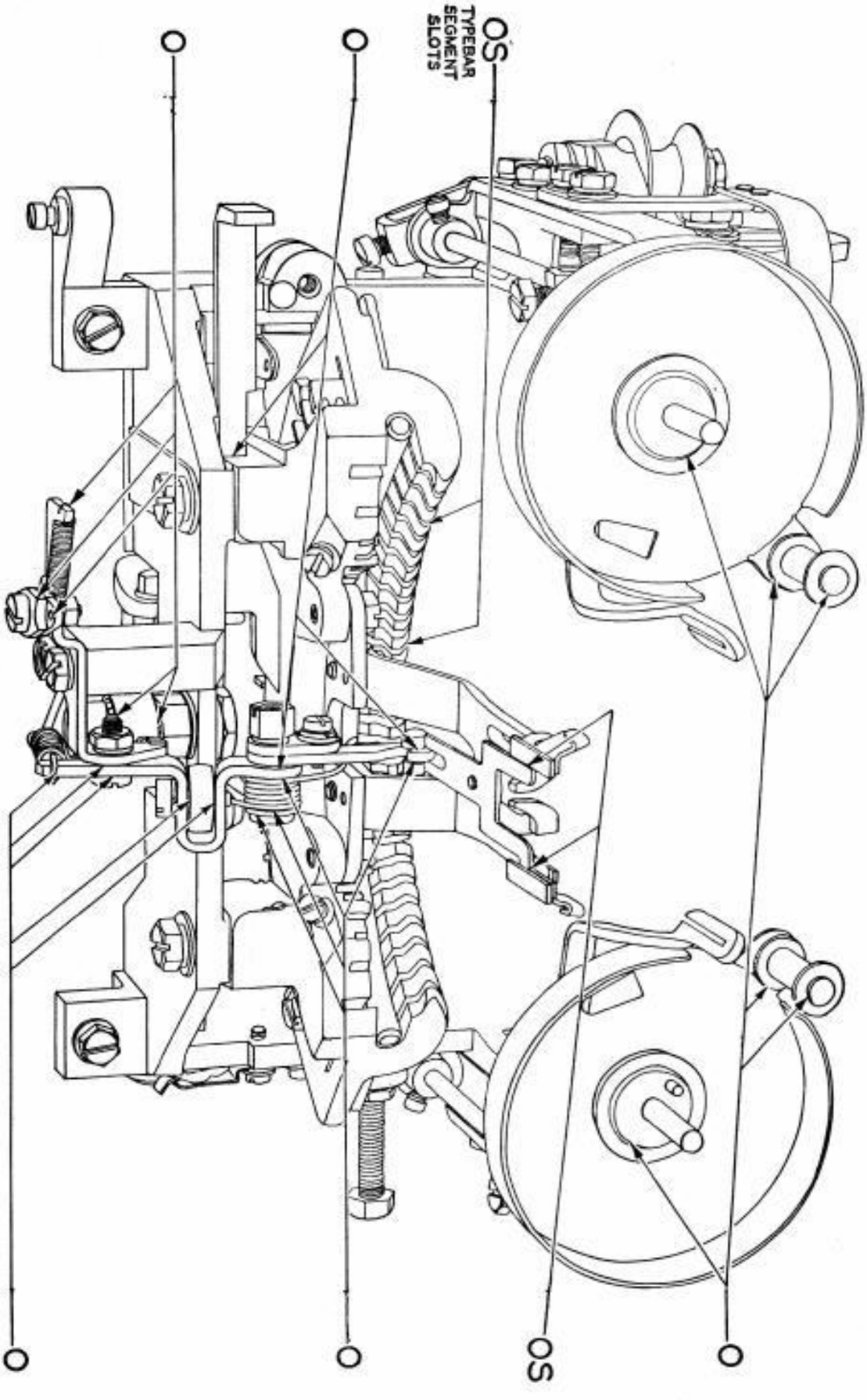

Fig. 3

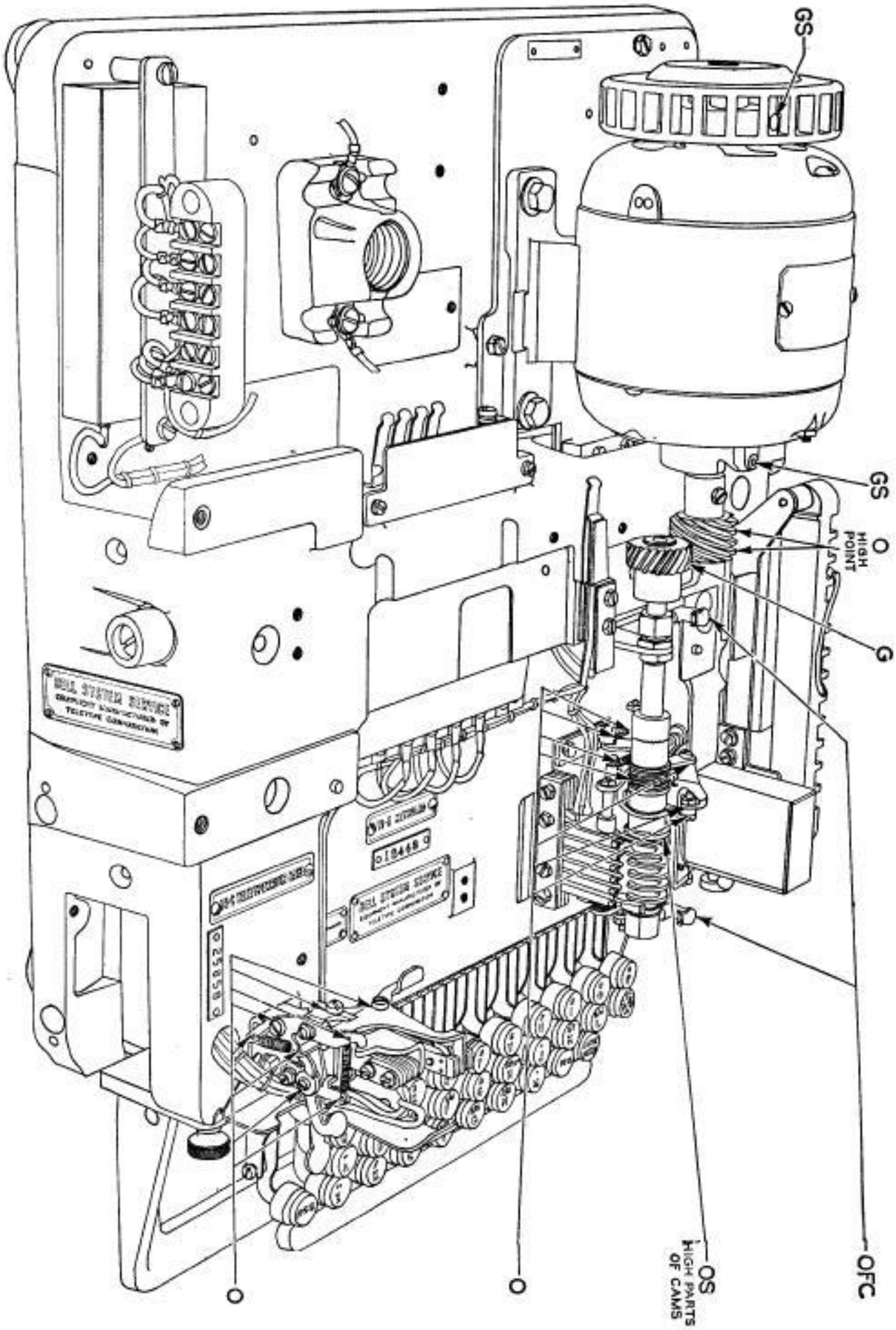

Fig. 4

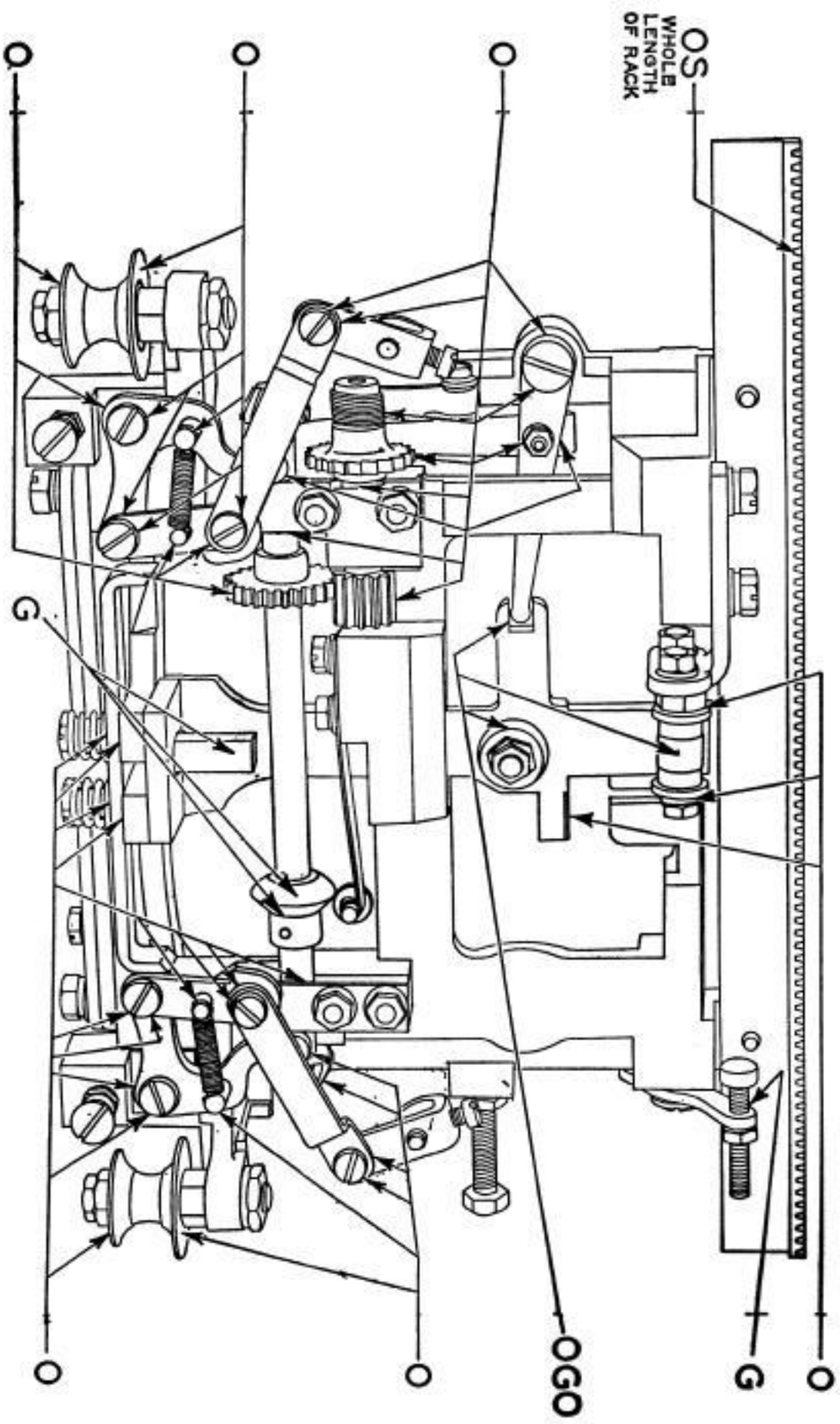

Fig. 5

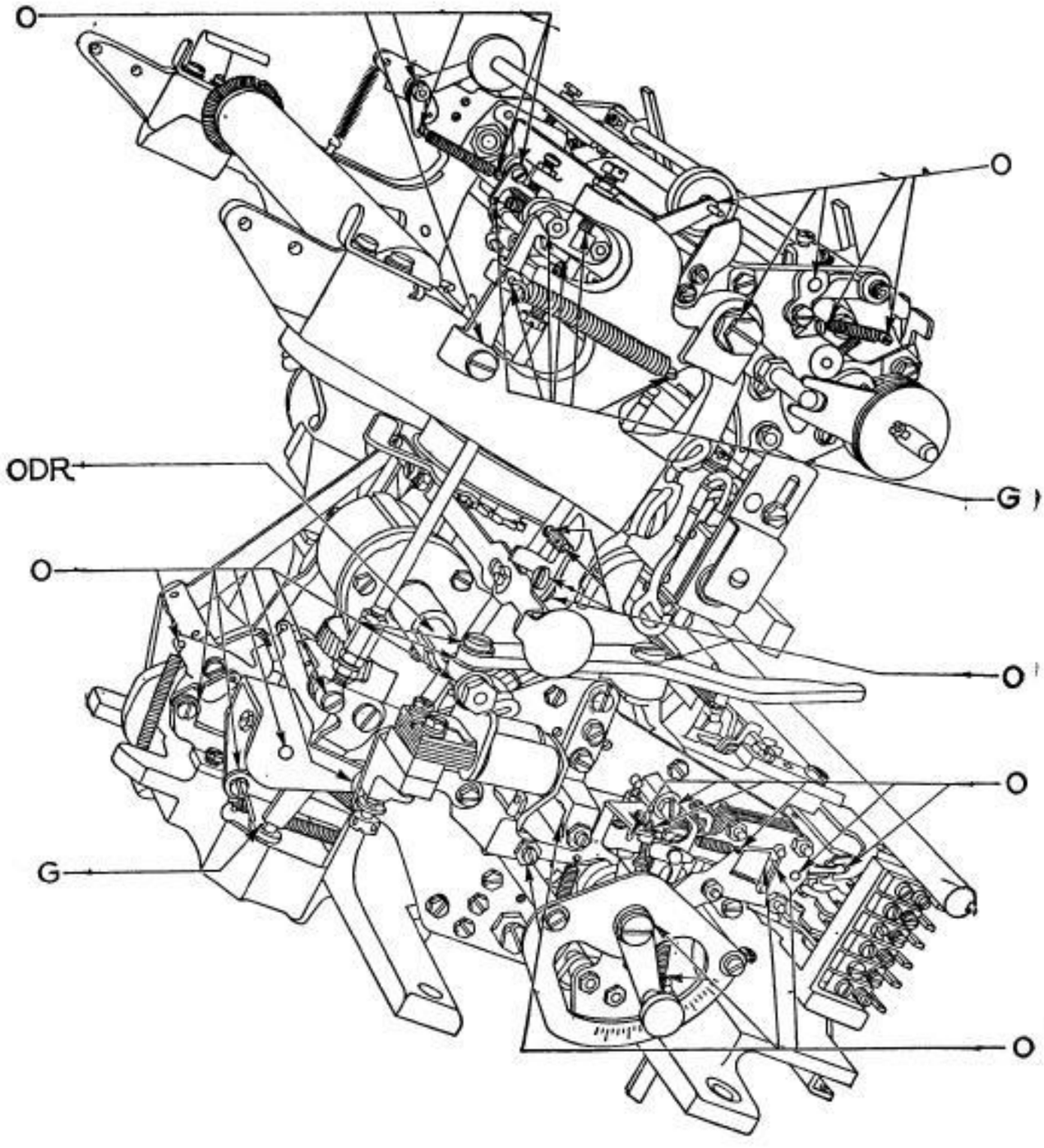

Fig. 6

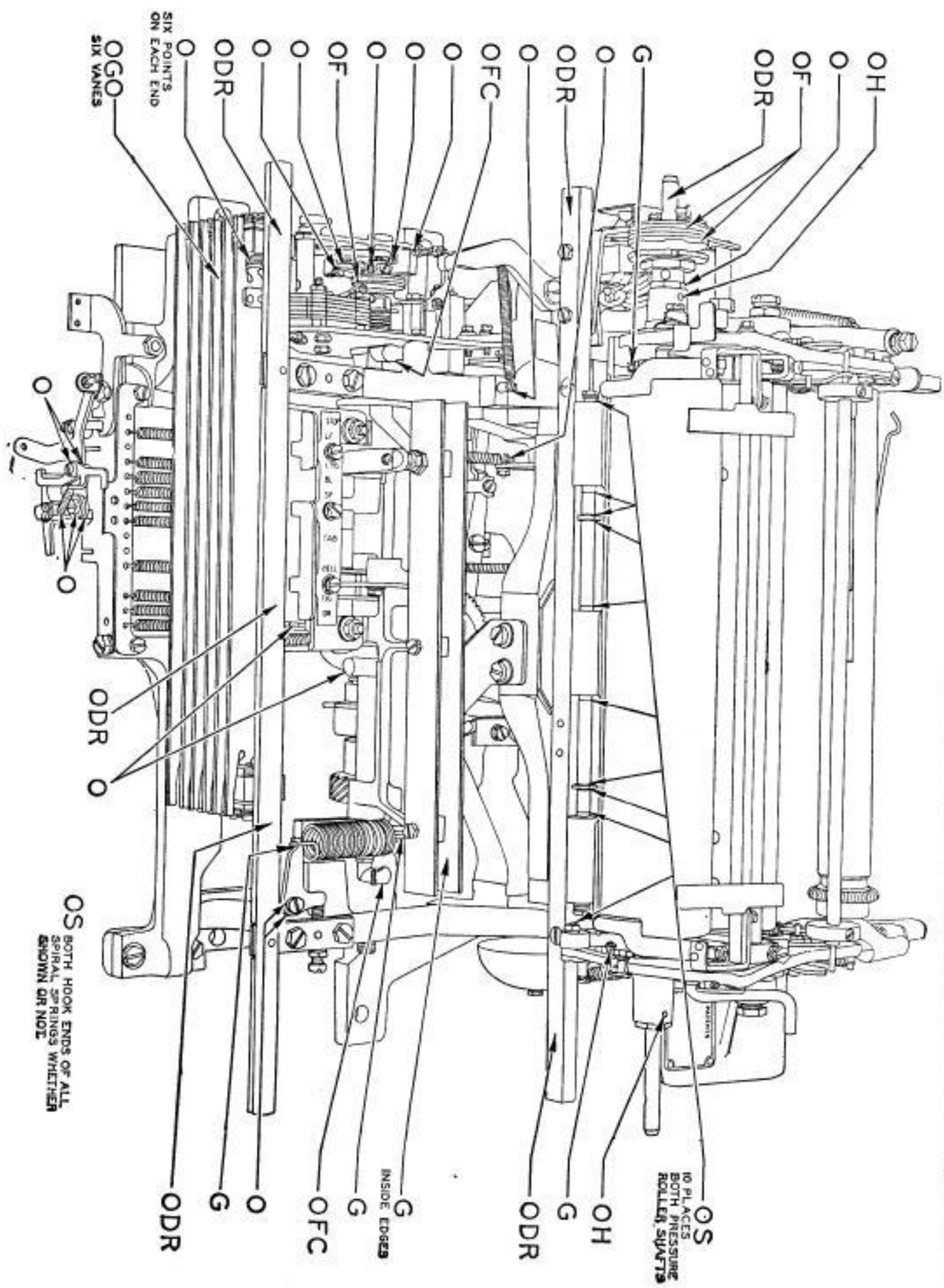
OH
O
OF
ODR
G
O
ODR
O
OFC
O
O
O
OF
O
O
ODR
O
SIX POINTS ON EACH END
OGO SIX VANES
O
O
ODR
O
OS BOTH HOOK ENDS OF ALL SPIRAL SPRINGS WHETHER SHOWN OR NOT
OS 10 PLACES BOTH PRESSURE ROLLER SHAFTS
OH
G
ODR
G INSIDE EDGES
G
OFC
O
G
ODR

Fig. 7

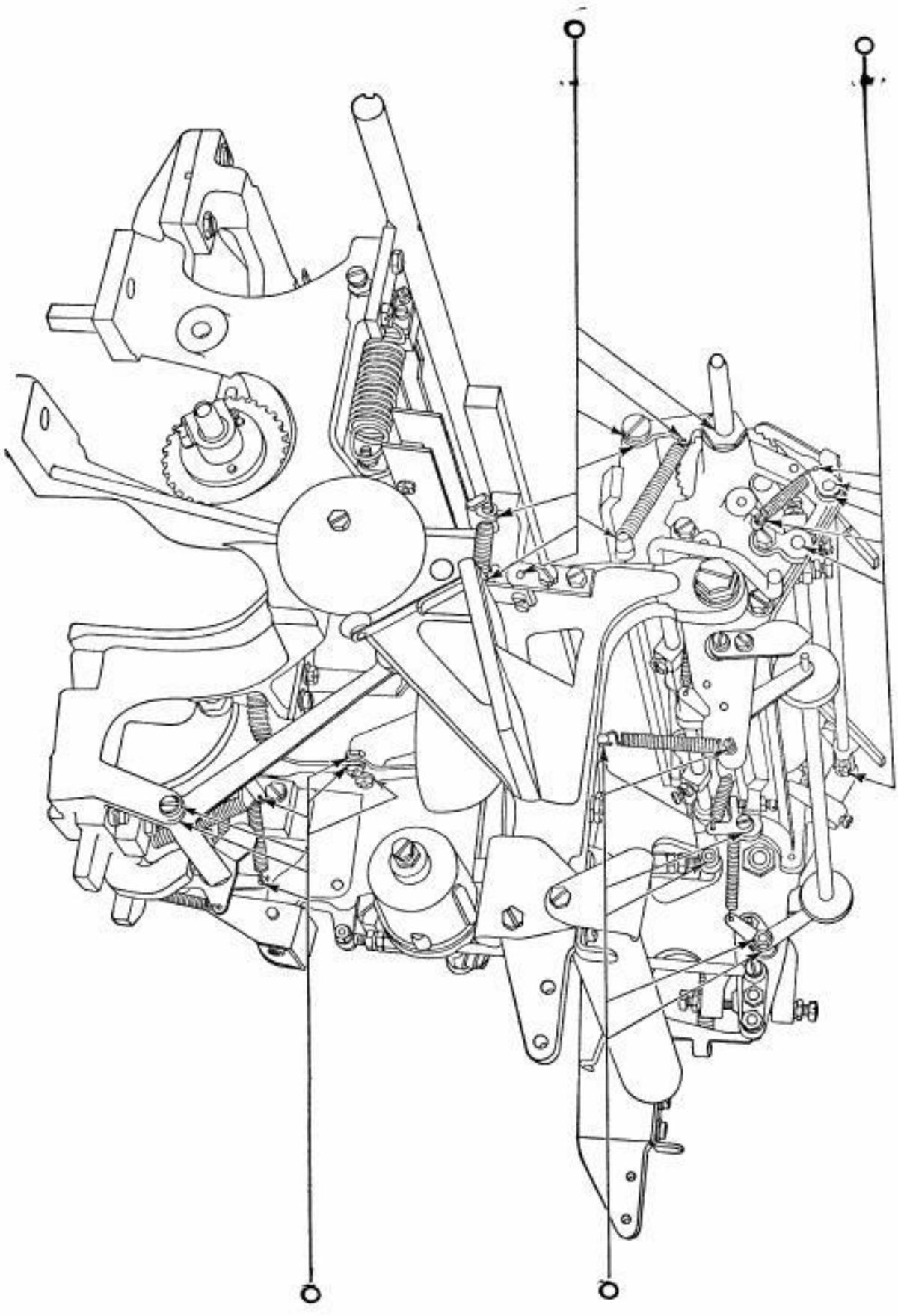

Fig. 8

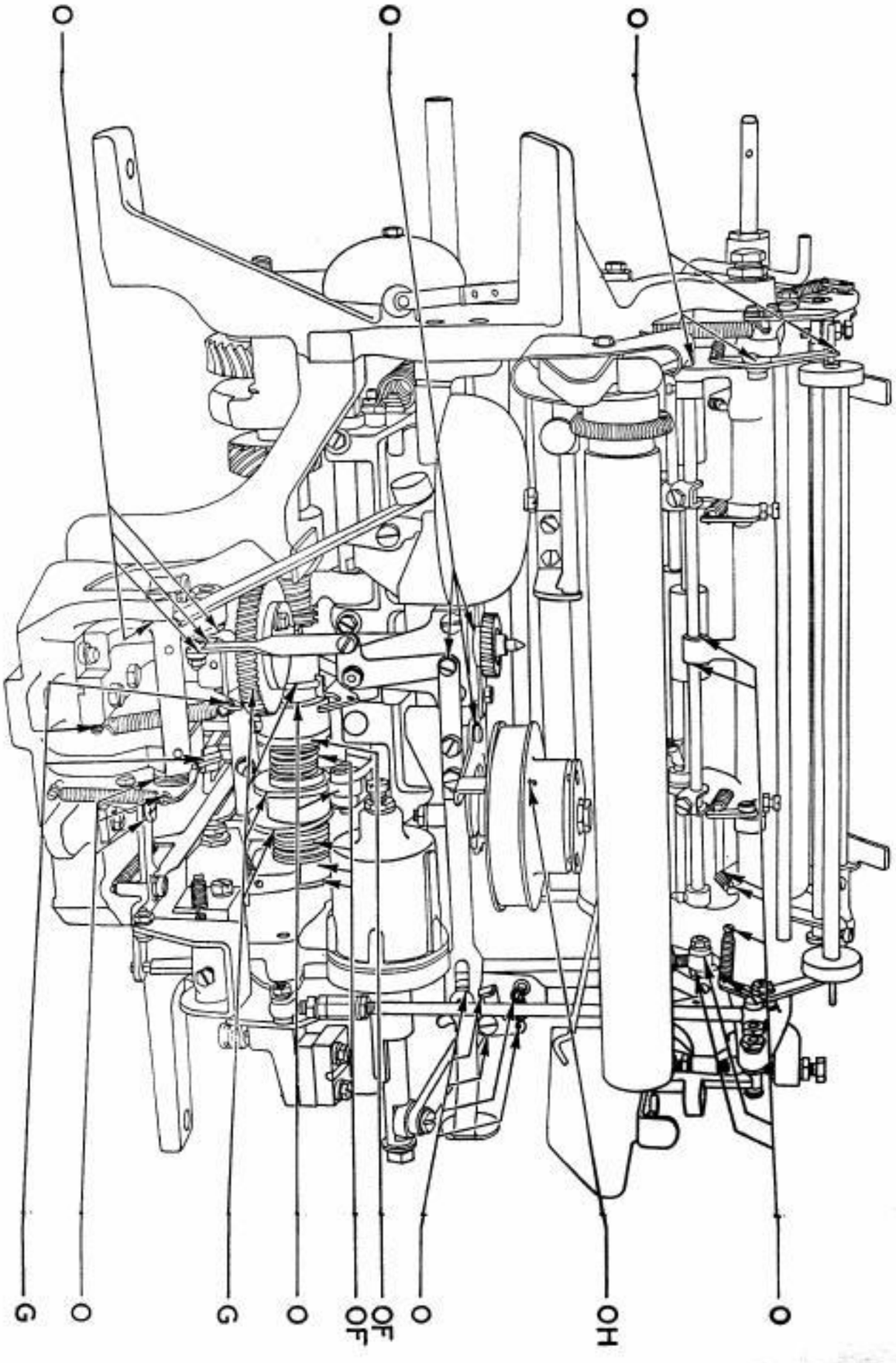

Fig. 9

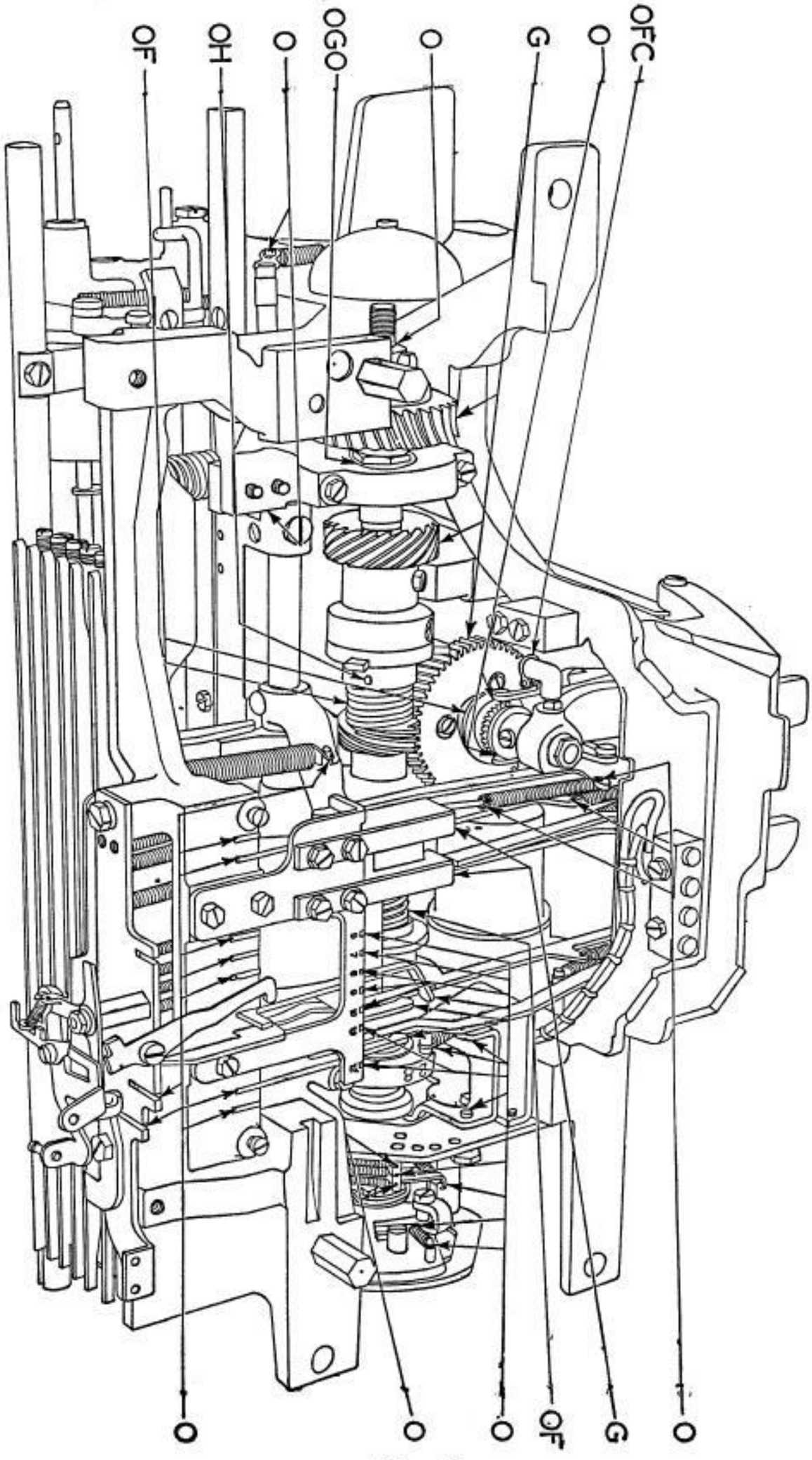

Fig. 10

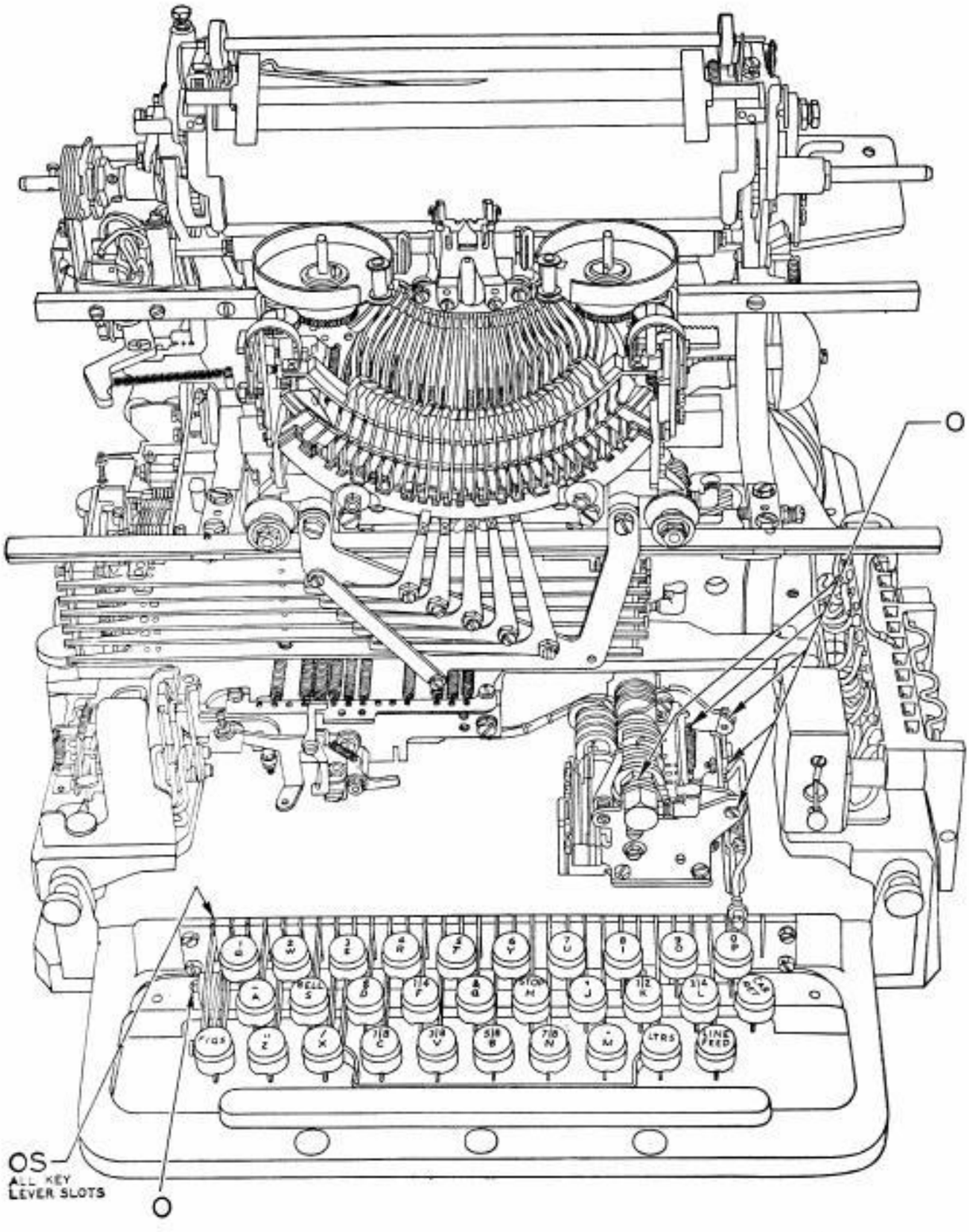

Fig. 11

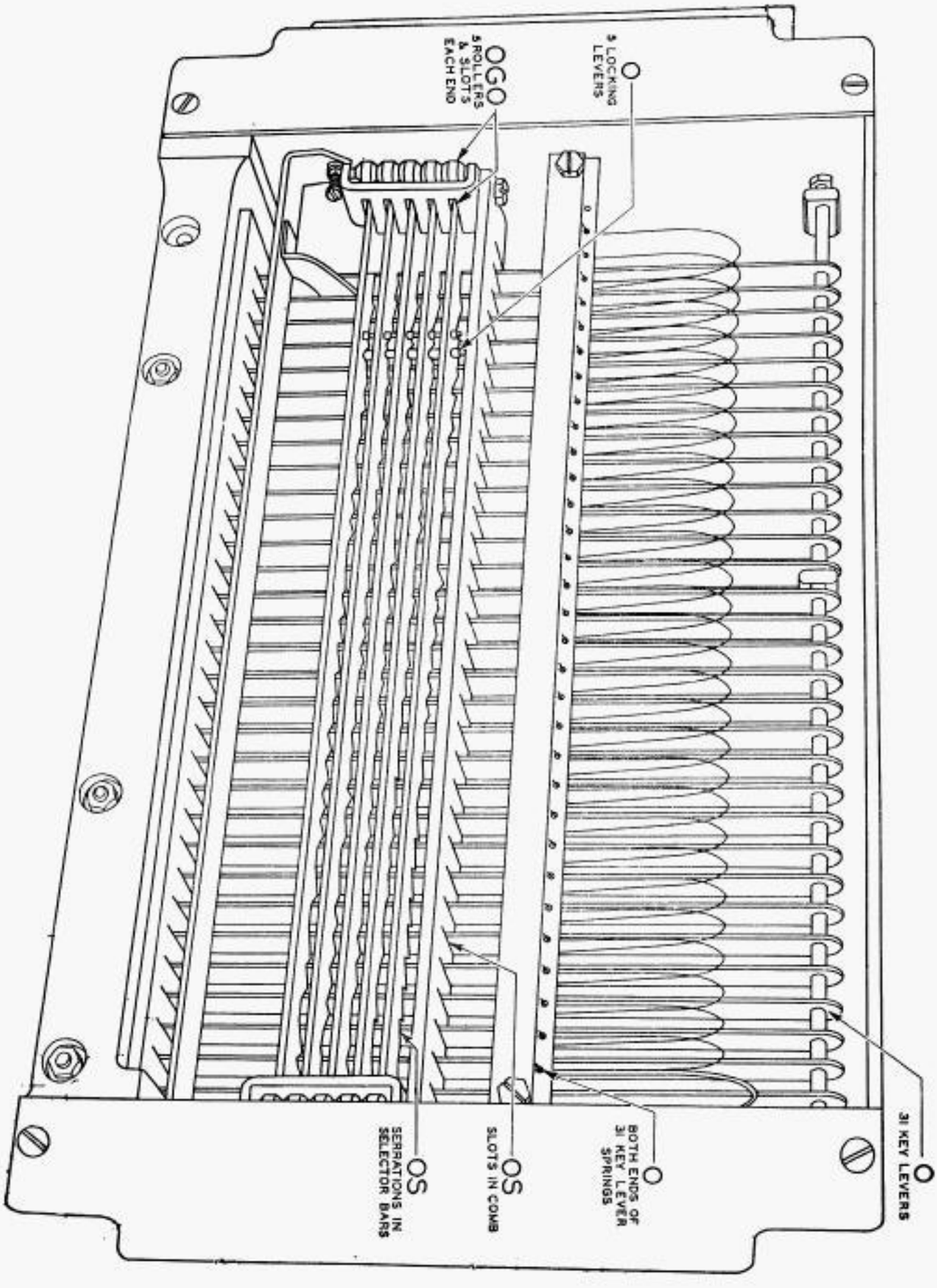
OGO
5 ROLLERS & SLOTS EACH END
O
9 LOCKING LEVERS
OS
SERRATIONS IN SELECTOR BARS
OS
SLOTS IN COMB
O
BOTH ENDS OF 31 KEY LEVER SPRINGS
O
31 KEY LEVERS

Fig. 12