NO.	NOTES	SUPPORTING INFORMATION		CONTENTS
		CATEGORY	NO.	

ISSUE CONTROL RECORD

SHEET NO.	ISSUE 2	3	4	5	6	7	8	9	10	11	12	13	14	15	16	17	18	19
1	X	X	X	X	X	X	X	X	X	X	X							
2	X	X	X	X	X	X	X	X	X									

REVISIONS APPLYING TO THIS CONTROL RECORD

ISSUE	DATE	AUTH. NO.
1	4-26-66	81893-1
2	2-6-68	95185
3	5-27-69	98494

4702WD

ISSUE CONTROL
SHEET 1 OF 1

ACTUAL WIRING DIAGRAM FOR AC 297 TELESPEED RECEIVING TERMINAL

RTTY ELECTRONICS
TELETYPE=Sales-Service-Parts
PO Box 20101 El Sobrante, Ca.
94820. (510)222-3102
mr_rtty@pacbell.net

WD NUMBER 4702 WD	
DRAWN D	CHKD.
ENGD. A.B.	APPD.

TELETYPE CORPORATION

4702WD

TC 482 (1-66) SEE R&D ROUTINE #5 FOR USE OF THIS FORM

NO.	NOTES
1.	WIRING LEGEND: DISTANT TERMINATING AREA; DISTANT TERMINATING DESIGNATION; T-D10-W-BR — WIRE COLOR CODE
2.	USE SLEEVING TO INSULATE, WHERE NECESSARY.
3.	ALL CONNECTIONS VIEWED FROM SOLDER END, UNLESS OTHERWISE SPECIFIED.
4.	NUMBERS IN PARENTHESES ARE NOT MARKED ON COMPONENTS.
5.	* DENOTES 18 GA. WIRE.
6.	DENOTES SHIELDED WIRE.
7.	FOR SCHEMATIC WIRING DIAGRAM, REFER TO N773WD.
8.	SPARE WIRES TO HAVE 173715 TERMINALS ON DISTANT TERMINATING END, TAPED SEPARATE AND TIED TO CABLE AT N CONNECTOR.

NOTE:
REVISION INFORMATION MUST ALSO BE REFLECTED ON THE ISSUE CONTROL RECORD, WHICH IS A PART OF THIS DRAWING.

4702 WD

REVISIONS

ISSUE	DATE	AUTH. NO.
A	2-1-62	72326
B	8-22-62	74280
Ø 4	1-11-63	75638
B 5	7-11-63	77223
E 6	8-27-63	77223-1
7	11-3-64	83848
8	12-31-64	82825
9	6-30-65	88052
10	4-26-66	81893-1
11	2-6-68	95185
12	5-26-69	98494

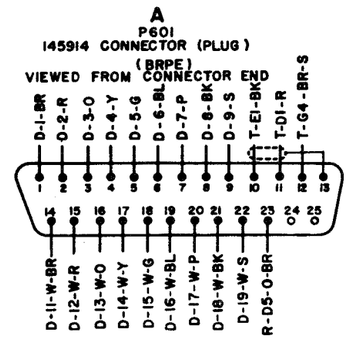

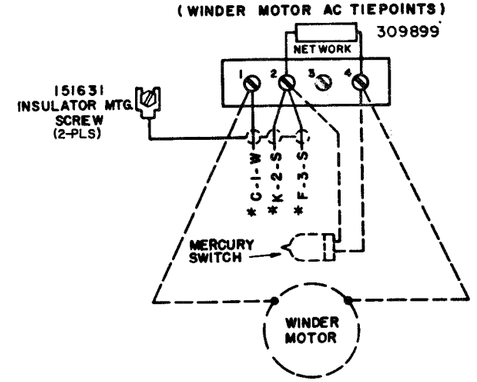

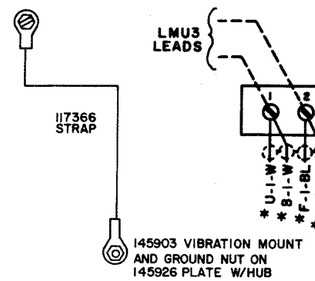

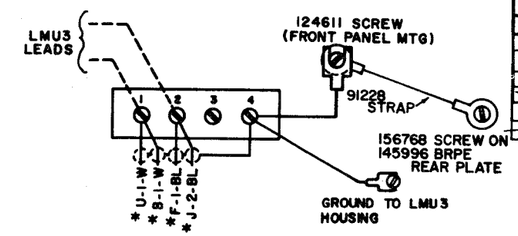

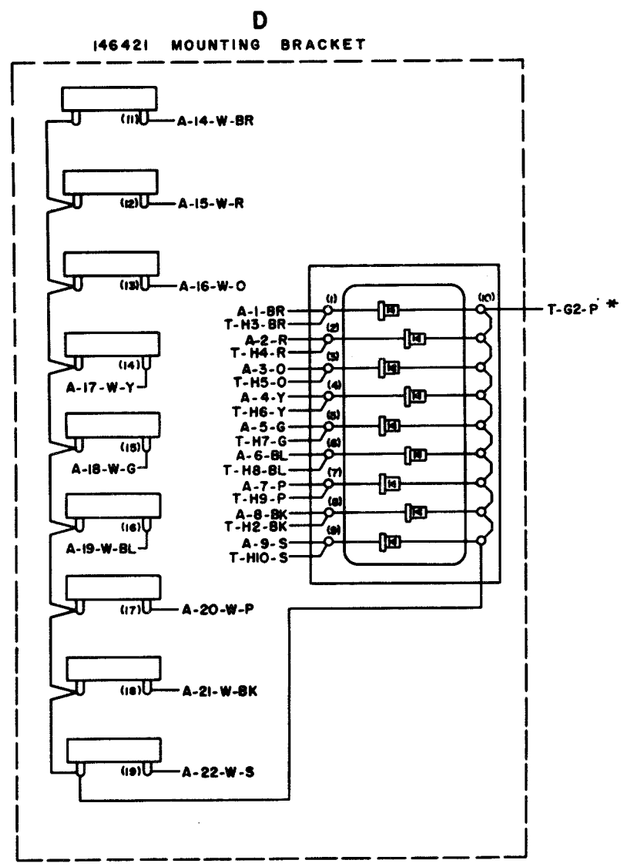

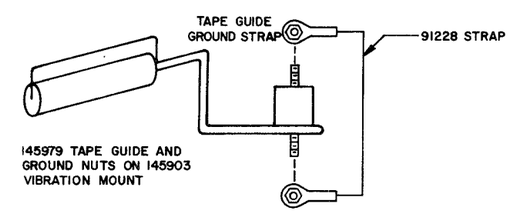

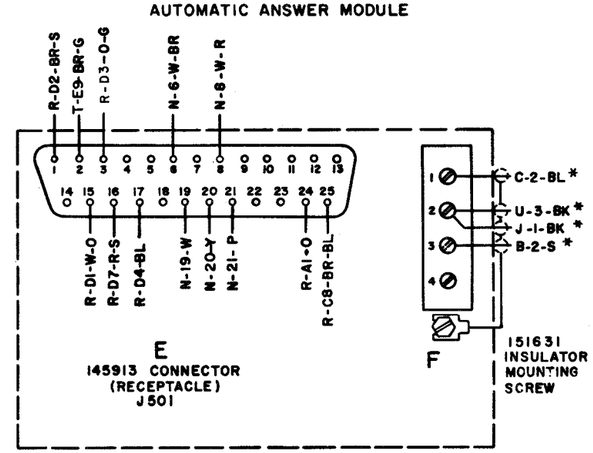

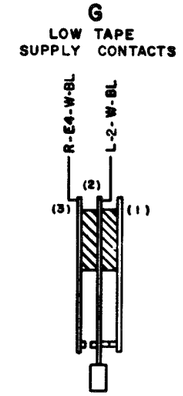

SEE ISSUE CONTROL RECORD FOR COMPLETE LIST OF SHEETS COMPRISING THIS W.D.
SHEET 1

ACTUAL
WIRING DIAGRAM
FOR
AC297
TELESPEED
RECEIVING
TERMINAL

APPROVALS	
D AND R	E OF M
------	------

E-NUMBER

PROD. NO. 4702WD

DATE

P.D. FILE NO. 1-A.148/13NAA

DRAWN A.B.	CHKD. A.Z.P.
ENGD. J.F.K.	APPD. R.J.R.

TELETYPE
CORPORATION

4702 WD

RTTY ELECTRONICS
TELETYPE=Sales-Service-Parts
PO Box 20101 El Sobrante, Ca.
94820. (510)222-3102
mr_rtty@pacbell.net

SEE SHEET 1 FOR NOTES.

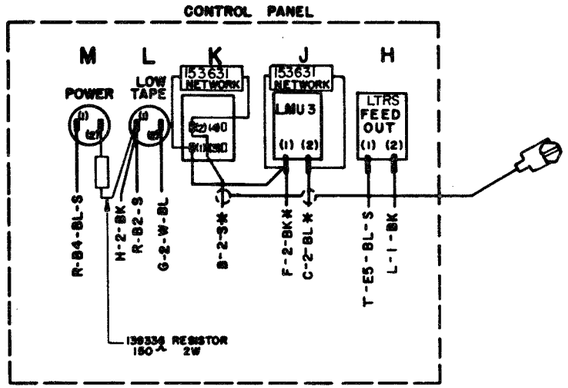

151630 GROUND SCREW ON CABINET DUST SHIELD

N
P701
145914 CONNECTOR (PLUG)
202A DATA SET
VIEWED FROM CONNECTOR END

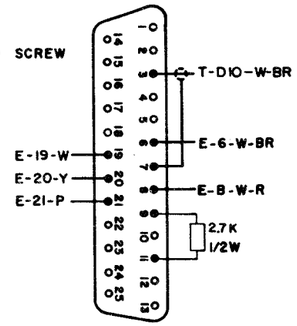

X
146638 NOISE SUPPRESSOR

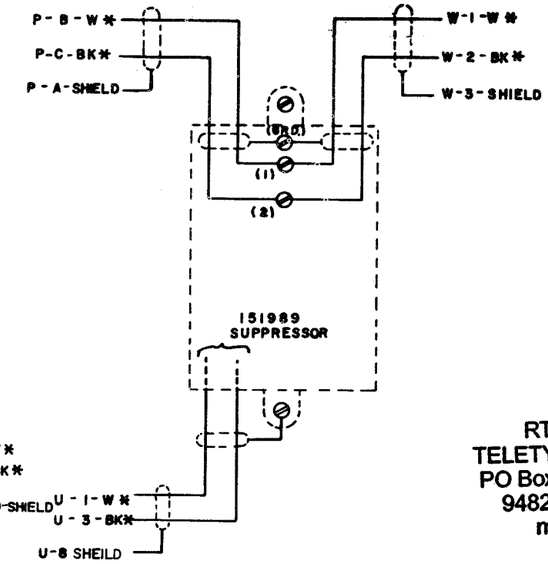

P
171643 PLUG
(MULTI-VOLTAGE RECTIFIER)

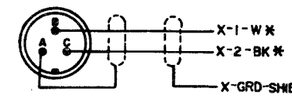

R
P902
174722 CONNECTOR (PLUG)
(MULTI-VOLTAGE RECTIFIER)

10	9	8	7	6	5	4	3	2	1	
						T-A4-O-G	T-A5-W	S-A5-BK-Y	E-24-O	A
		T-B8-BR-Y	T-B7-R-Y	T-B6-BR*	S-B5-O*	M-1-BL-S	T-B3-R-G	L-1-S		B
		E-25-BR-BL		S-B6-BK*	T-B5-W*	T-B4-BL*	S-B3-G	T-A8-S*		C
			E-16-R-S		A-23-O-BR	E-17-BL	SPARE W-G E-3-O-G	E-1-BR-S	E-15-W-O	D
		S-B8-BR	S-B7-R			G-3-W-BL				E

S
P301
174722 CONNECTOR
(TRD)

10	9	8	7	6	5	4	3	2	1	
					R-A2-BK-Y					A
		R-E8-BR	R-E7-R	R-C6-BK*	R-B5-O*		R-C3-G		T-B1-W-BL	B
T-C10-W-R	T-C9-W-P	T-C8-W-BL	T-C7-W-G	T-C6-W-Y	T-C5-W-O	T-C4-W-R	T-C3-W-BR	T-C2-W-BK	T-C1-W	C
	T-D9-R-O	T-D8-R-S	T-D7-G-S	T-D6-Y-G	T-D5-O-S	T-D4-R-BL	T-D3-BR-BL	T-D2-BK-BL		D
						T-E4-W-S				E

T
P401
174723 CONNECTOR (PLUG)
(TRSC)

10	9	8	7	6	5	4	3	2	1	
		R-C2-S*			R-A3-W	R-A4-O-G				A
		R-B8-BR-Y	R-B7-R-Y	R-B6-BR*	R-C5-W*	R-C4-BL*	R-B3-R-G		S-B1-W-BL	B
S-C10-W-R	S-C9-W-P	S-C8-W-BL	S-C7-W-G	S-C6-W-Y	S-C5-W-O	S-C4-W-R	S-C3-W-BR	S-C2-W-BK	S-C1-W	C
N-3-W-BR	S-D9-R-O	S-D8-R-S	S-D7-G-S	S-D6-Y-G	S-D5-O-S	S-D4-R-BL	S-D3-BR-BL	S-D2-BK-BL	A-11-R	D
	E-2-BR-G				H-1-BL-S	S-E4-W-S			A-10-BK	E
										F
		SPARE O-BR				A-12-BR-S		D-10-P*		G
D-9-S	D-7-P	D-6-BL	D-5-G	D-4-Y	D-3-O	D-2-R	D-1-BR	D-8-BK		H

W
202A DATA SET
POWER PLUG

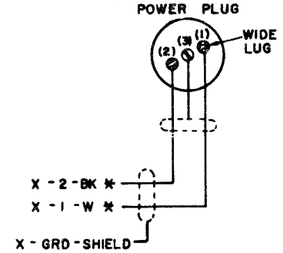

U
ELECTRICAL SERVICE PANEL
TOP VIEW

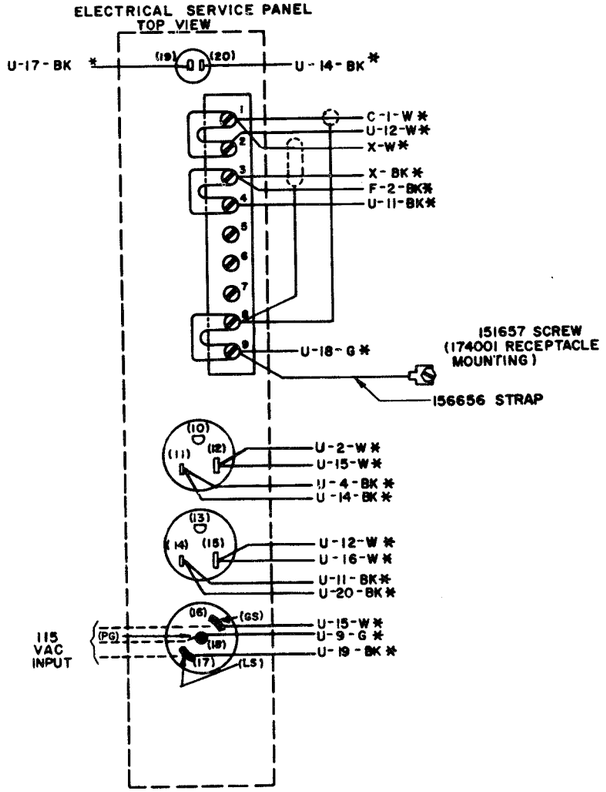

NOTE:
REVISION INFORMATION MUST ALSO BE REFLECTED ON THE ISSUE CONTROL RECORD, WHICH IS PART OF THIS W.D.

4702 WD

REVISIONS

ISSUE	DATE	AUTH. NO.
A	2-1-62	72326
B	8-22-62	74290
Z 4	1-11-63	75635
B 5	7-11-63	77223
Z 6	8-27-63	77223-1
7	11-3-64	83848
8	12-31-64	82825
9	6-30-65	88032
10	4-26-66	91693-1

RTTY ELECTRONICS
TELETYPE=Sales-Service-Parts
PO Box 20101 El Sobrante, Ca. 94820. (510)222-3102
mr_rtty@pacbell.net

SEE ISSUE CONTROL RECORD FOR COMPLETE LIST OF SHEETS COMPRISING THIS W.D.

SHEET 2

ACTUAL WIRING DIAGRAM FOR AC297 TELESPEED RECEIVING TERMINAL

APPROVALS

D AND R	E OF M
------	-----

E-NUMBER

PROD. NO. 4702WD

DATE

P.D. FILE NO. 1-A.148/13MAA

DRAWN A.B. CHKD. A.Z.P.

ENGD. J.F.K. APPD. R.J.P.

TELETYPE CORPORATION

4702 WD