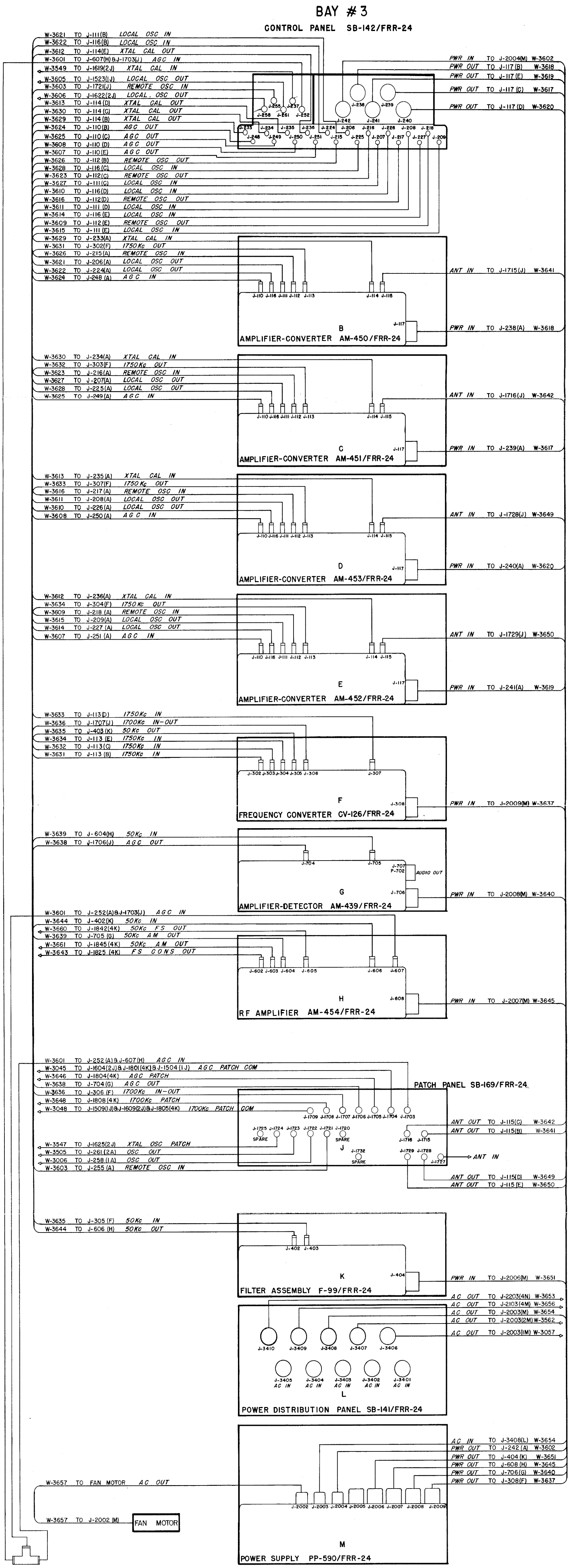

Figure 3-10. Interconnection Diagram, Bay no. 3