~~266-006200~~ C-391

NOTICE: WHEN GOVERNMENT DRAWINGS, SPECIFICATIONS, OR OTHER DATA ARE USED FOR ANY PURPOSE OTHER THAN IN CONNECTION WITH A DEFINITELY RELATED GOVERNMENT PROCUREMENT OPERATION, THE UNITED STATES GOVERNMENT THEREBY INCURS NO RESPONSIBILITY NOR ANY OBLIGATION WHATSOEVER; AND THE FACT THAT THE GOVERNMENT MAY HAVE FORMULATED, FURNISHED, OR IN ANY WAY SUPPLIED THE SAID DRAWINGS, SPECIFICATIONS, OR OTHER DATA IS NOT TO BE REGARDED BY IMPLICATION OR OTHERWISE AS IN ANY MANNER LICENSING THE HOLDER OR ANY OTHER PERSON OR CORPORATION, OR CONVEYING ANY RIGHTS OR PERMISSION TO MANUFACTURE, USE, OR SELL ANY PATENTED INVENTION THAT MAY IN ANY WAY BE RELATED THERETO.

NOTE:

*FOR INFORMATION ONLY, CONTRACTOR MAY AT HIS OPTION DEVIATE FROM THESE PROCESS DETAILS

~~*SWE APPROVAL~~
~~SYM PR10042-6~~

REVISIONS

SYM	DESCRIPTION	DATE	APPROVAL
A_2	A_1 - ADDED NOTE 2. A_2 - PART NO. WAS 81715-WE	15 OCT. 59	42428-PC-59-A1-51 REV'D PME

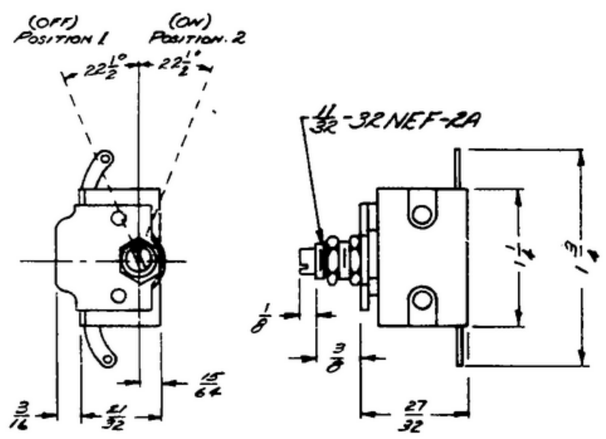

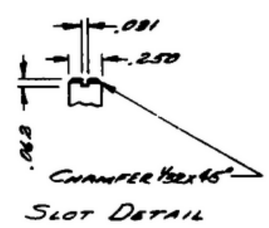

SLOT DETAIL

(A_2) 1.- SWITCH SHALL BE #81715-WF AS SUPPLIED BY ARROW-HART & HEGEMAN, HARTFORD, CONNECTICUT, OR EQUAL.

(A_1) 2.- CONTACT RATING 3A AT 250V. RESISTIVE LOAD.

REQD	PART NO.	DESCRIPTION	MATL	MATL SPEC

LIST OF MATERIAL

SM-D-343623	
SM-D-249135	SC-DL-248775
SM-D-178477	SC-DL-178467
NEXT ASSY	USED ON

APPLICATION

UNLESS OTHERWISE SPECIFIED
DIMENSIONS ARE IN INCHES
TOLERANCES ON

FRACTIONS	DECIMALS	ANGLES
$\pm\frac{1}{64}$	$\pm.005$	—

AUTHENTICATION
DRAWN 21052-PH-50-93
TRACED PHOTO
CHECKED [signature]
VERIFIED PD BR
APPROVED PD BR
REVIEWED PME
DATE 1 SEPT 55

SWITCH

SCALE — —

SIGNAL CORPS ENGINEERING LABORATORIES
FORT MONMOUTH NEW JERSEY

SM-B-178480

PD-794—074-3071-60—A557—177438

WHEN REFERRING TO THIS DRAWING STATE DRAWING NO., APPLICABLE ISSUE SYMBOL, IF ANY, AND DATE