NOTICE: When Government drawings, specifications, or other data are used for any purpose other than in connection with a definitely related Government procurement operation, the United States Government thereby incurs no responsibility or any obligation whatsoever; and the fact that the Government may have formulated, furnished, or in any way supplied the said drawings, specifications, or other data is not to be regarded by implication or otherwise as in any manner licensing the holder or any other person or corporation, or conveying any rights or permission to manufacture, use or sell any patented invention that may in any way be related thereto.

~~506-1875.002~~ ~~R-991~~

NEXT ASSEMBLY	USED ON
SM-D-178727	SC-DL-178467
SM-C-248970	SC-DL-248775

(A2)

SWE. * APPROVAL	SYM	REVISIONS DESCRIPTION	DATE	APPROVAL
SYM PR 10042-B	A3	A1-WAS COMP. B, QQ-B-611; A2-ADDED APPL. SM-C-248970, SC-DL-248775. A3-ADDED C'SINK.	6 OCT. 59	42428-PC-59-A1-51 REV'D. PME
CA 84855	B	(1)-ADDED NOTE #6.	15 OCT 60	42428-PC-59 REV'D. PME
CA 84875	C	(1)-.092 WAS .094. (2)-.184 ±.003/.000 WAS .187 ±.003. (3)-NOTE #7 ADDED.	17 OCT. 60	42428-PC-59 REV'D. PME

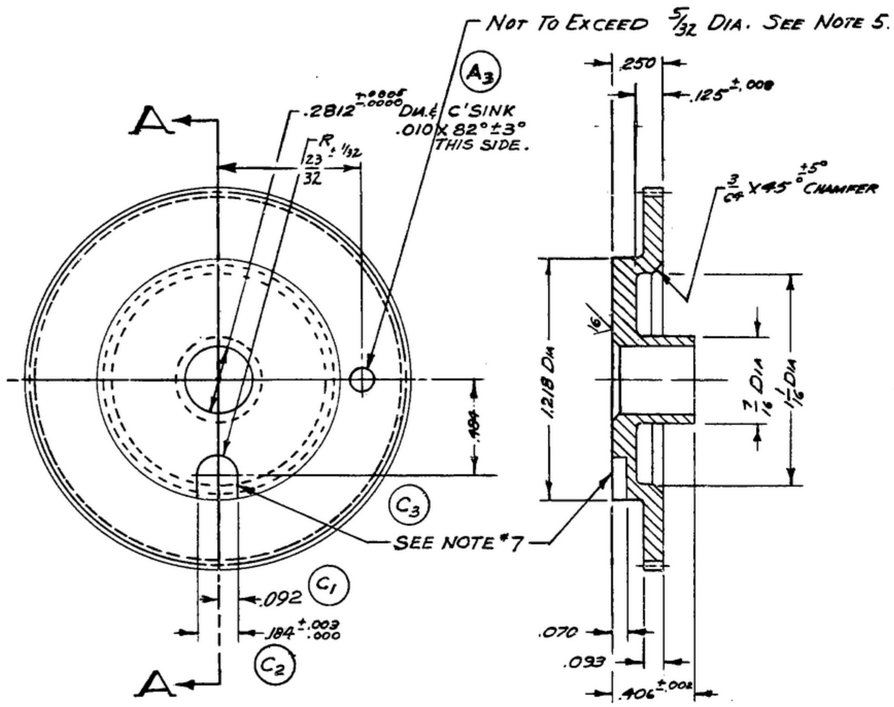

SECTION A-A

(A1) BRASS, COMP. 22 1/2 H, PER SPEC QQ-B-626.

1-NORMAL DIAMETRAL PITCH 48
NORMAL PRESSURE ANGLE 14 1/2°
NUMBER OF TEETH 90
THEORETICAL PITCH DIAMETER 1.875
BACKLASH .003 TO .004 WHEN REFERRED TO THE THEORETICAL PITCH CIRCLE
AMERICAN STANDARD INVOLUTE TOOTH FORM
ALL TERMS USED AS DEFINED BY AGMA STANDARDS
2-ALL RADII SHALL BE 1/32 UNLESS OTHERWISE SPECIFIED
3-REMOVE ALL BURRS
4-ECCENTRICITY BETWEEN PITCH DIAMETER & BORE MUST NOT EXCEED .002 TIR
5-5/32 MAX DIA HOLE IS AN OPTIONAL CONSTRUCTION HOLE AT 90° ±5° TO THE .187 SLOT ℄.
(B1) 6.-FINISH: CHEMICAL POLISH PER IRIDITE #7 METCOTE PROCESS BU ALLIED RESEARCH PRODUCTS INC., BALTIMORE, MD., OR EQUAL.
(C3) 7.-MAINTAIN SHARP CORNER AROUND THIS EDGE.

NOTE:
*FOR INFORMATION ONLY, CONTRACTOR MAY AT HIS OPTION DEVIATE FROM THESE PROCESS DETAILS

REQD.	PART NO.	DESCRIPTION	MATL	SPEC	NOTE

UNLESS OTHERWISE SPECIFIED
DIMENSIONS ARE IN INCHES
TOLERANCES ON
FRACTIONS ± 1/64
DECIMALS ± .005
ANGLES ± ——
COMMERCIAL TOLERANCES APPLY TO STOCK SIZES
ALL SURFACES √

AUTHENTICATION
DRAWN 21852-PH-50-93
TRACED PHOTO
CHECKED [illegible]
VERIFIED P.D.BR.
APPROVED P.D.BR.
REVIEWED PME
DATE 30 JUN 53

GEAR

SCALE 2/1

~~90-585~~

DEPARTMENT OF THE ARMY
SIGNAL CORPS ENGINEERING LABORATORIES
FORT MONMOUTH NEW JERSEY

SM-C-178730

WHEN REFERRING TO THIS DRAWING STATE DRAWING NO., APPLICABLE ISSUE SYMBOL AND DATE