RH 0.5

R-391 ~~506 1792 002~~

NOTICE: WHEN GOVERNMENT DRAWINGS, SPECIFICATIONS, OR OTHER DATA ARE USED FOR ANY PURPOSE OTHER THAN IN CONNECTION WITH A DEFINITELY RELATED GOVERNMENT PROCUREMENT OPERATION, THE UNITED STATES GOVERNMENT THEREBY INCURS NO RESPONSIBILITY NOR ANY OBLIGATION WHATSOEVER; AND THE FACT THAT THE GOVERNMENT MAY HAVE FORMULATED, FURNISHED, OR IN ANY WAY SUPPLIED THE SAID DRAWINGS, SPECIFICATIONS, OR OTHER DATA IS NOT TO BE REGARDED BY IMPLICATION OR OTHERWISE AS IN ANY MANNER LICENSING THE HOLDER OR ANY OTHER PERSON OR CORPORATION, OR CONVEYING ANY RIGHTS OR PERMISSION TO MANUFACTURE, USE, OR SELL ANY PATENTED INVENTION THAT MAY IN ANY WAY BE RELATED THERETO.

NOTE:
*FOR INFORMATION ONLY, CONTRACTOR MAY AT HIS OPTION DEVIATE FROM THESE PROCESS DETAILS

~~* SWE APPROVAL~~
~~SYM PR10042-3~~

REVISIONS			
SYM	DESCRIPTION	DATE	APPROVAL
A_3	A_1 - RENUMBERED NOTES; A_2 - ADDED APPL. SM-B-178959, SC-DL-248775. A_3 - COMP. 302 WAS COMP. G.	6 OCT. 59	42428-PC-59-A1-51 REV'D. PME

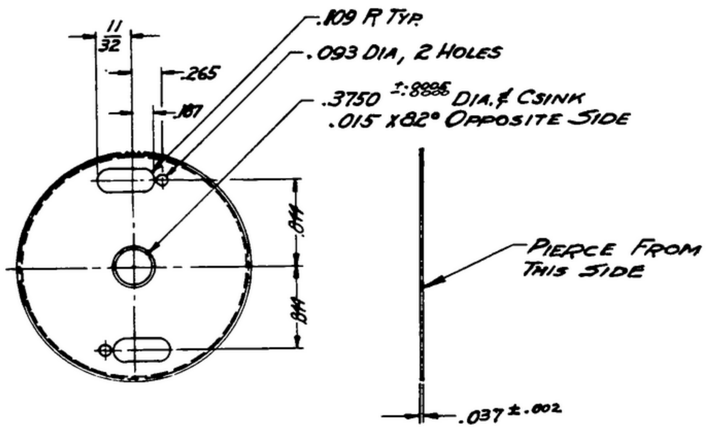

NOTES: (A3)

(A1) 1.- STEEL, COMP 302 COND ANNEALED, PER SPEC MIL-S-5059.

2.- GEAR DATA:
NORMAL DIAMETRAL PITCH ——— 48
NORMAL PRESSURE ANGLE ——— 14 1/2°
NUMBER OF TEETH ——— 108
THEORETICAL PITCH DIAMETER ——— 2.250
BACKLASH .0015 TO .0025 WHEN REFERRED TO THE THEORETICAL PITCH CIRCLE
AMERICAN STANDARD INVOLUTE TOOTH FORM
ALL TERMS USED AS DEFINED BY AGMA STANDARDS.

3.- PART MUST BE FLAT WITHIN .004 TIR.
4.- PART MUST BE FREE OF BURRS & SHARP EDGES.
5.- ECCENTRICITY BETWEEN PITCH DIAMETER & BORE. MUST NOT EXCEED .002 TIR.
6.- ALL DIMENSIONS FOR SLOTS & .093 DIA. HOLES ARE TYPICAL.

REQD	PART NO.	DESCRIPTION	MATL	MATL SPEC	

LIST OF MATERIAL

		UNLESS OTHERWISE SPECIFIED DIMENSIONS ARE IN INCHES TOLERANCES ON FRACTIONS ± 1/64 DECIMALS ± .005 ANGLES ———	AUTHENTICATION
			DRAWN 21862-PH-50-93
			TRACED PHOTO
			CHECKED [signature]
(A2) SM-B-178959	SC-DL-248775		VERIFIED P.D.BR.
SM-B-178959	SC-DL-178467		APPROVED P.D.BR.
NEXT ASSY	USED ON		REVIEWED PME
APPLICATION			DATE 15-MAR-54

GEAR

SCALE 1/1

SIGNAL CORPS ENGINEERING LABORATORIES
FORT MONMOUTH NEW JERSEY

SM-C-178960

PD-794—974-0471-51—A587—177438

WHEN REFERRING TO THIS DRAWING STATE DRAWING NO., APPLICABLE ISSUE SYMBOL, IF ANY, AND DATE