NOTICE: WHEN GOVERNMENT DRAWINGS, SPECIFICATIONS, OR OTHER DATA ARE USED FOR ANY PURPOSE OTHER THAN IN CONNECTION WITH A DEFINITELY RELATED GOVERNMENT PROCUREMENT OPERATION, THE UNITED STATES GOVERNMENT THEREBY INCURS NO RESPONSIBILITY NOR ANY OBLIGATION WHATSOEVER; AND THE FACT THAT THE GOVERNMENT MAY HAVE FORMULATED, FURNISHED, OR IN ANY WAY SUPPLIED THE SAID DRAWINGS, SPECIFICATIONS, OR OTHER DATA IS NOT TO BE REGARDED BY IMPLICATION OR OTHERWISE AS IN ANY MANNER LICENSING THE HOLDER OR ANY OTHER PERSON OR CORPORATION, OR CONVEYING ANY RIGHTS OR PERMISSION TO MANUFACTURE, USE, OR SELL ANY PATENTED INVENTION THAT MAY IN ANY WAY BE RELATED THEREIN.

"THIS DOCUMENT HAS BEEN PURCHASED BY THE GOVERNMENT AND MAY BE REPRODUCED AND USED IN CONNECTION WITH ANY GOVERNMENT PROCUREMENT OR MAINTENANCE OPERATION."

NOTE: *FOR INFORMATION ONLY. CONTRACTOR MAY AT HIS OPTION DEVIATE FROM THESE PROCESS DETAILS

SYM	DESCRIPTION	DATE	APPROVAL
A11	(1) ADDED REF NOTE 15 TO ITEMS 66, 70, 72, 73, 75, 76, 92; (2) ADDED W/NUT TO ITEM 21; (3) ITEM 63 QTY WAS 57; (4) ITEM 61 QTY WAS 12; (5) ADDED NO. 8 TO ITEM 59; (6) ITEM 44 WAS SM-C-283205-1; (7) ITEM 45 WAS SM-C-283205-2; (8) ADDED NOTE 26; (9) SEE SHEET 2 (10), (11) SEE SHEET 3 FOR REV.	25 MAR 1965	21582-PC-61 REVD PME
B	(11) NOTE-31 ADDED-(2) ITEM 65 WAS ASA B13.3.	4 MAR 1966	JLC JM R.P.

B2
B1

NOTES:

1. PART MAY BE SUPPLIED BY OAK MFG. CO., CHICAGO, ILLINOIS OR EQUAL.
2. .116 IDX .187 O.D. X .031 THK PHENOLIC LTS-E-1 PER MIL-P-79, TYPE PEM. SHALL BE FUNGUS RESISTANT OR OR TREATED WITH FUNGUS RESISTANT MATL PER MIL-V-173, TYPE 1.
3. 7/16 O.D. X 3/16 I.D. MATL #1 INDIA MICA: THICKNESS OF WASHER AVERAGE WITH VARIATION .007 TO .025.
4. PART MAY BE SUPPLIED BY CENTRAL SCREW CO., CHICAGO, ILLINOIS OR EQUAL.
5. .125 I.D. X .312 O.D. X .027 THK. FINISH: E300 PER MIL-F-14072
6. .167 I.D. X .312 O.D. X .032 THK. FINISH: E300 PER MIL-F-14072.
7. NO. 8 LARGE .172 I.D. X .437 O.D. X .036 THK. FINISH: E300 PER MIL-F-14072.
8. .203 I.D. X .500 O.D. X .060 THK. FINISH: E300 PER MIL-F-14072.
9. PART MAY BE 1/4 HEX. X 3/32 THK. DOUBLE CHAMFER, AS SUPPLIED BY PHEDOLL MFG. CO., CHICAGO, ILLINOIS OR EQUAL. FINISH: E 300 PER MIL-F-14072
10. 1/4 HEX. X 3/32 THK, DOUBLE CHAMFER. FINISH: E 300 PER MIL-F-14072
11. 3/16 HEX. X 1/16 THK, DOUBLE CHAMFER. FINISH: E 300 PER MIL-F-14072
12. PART MAY BE SUPPLIED BY PHEDOLL MFG. CO., CHICAGO, ILLINOIS (PHILLIPS-CROSS-RECESSED) OR EQUAL.
13. 3-48 NC-2A X 1/4 LG., BRASS, PAN HEAD IN ACCORDANCE WITH BUREAU OF STANDARDS HANDBOOK H28.
14. PART MAY BE NO. 1220-G2 INT. LOCK FOR 3/8 SCREW, 410 STEEL, .377/.391 I.D. X .507/.493 O.D. X .022 THK. AS SUPPLIED BY SNAKEPROOF INC., CHICAGO, ILLINOIS OR EQUAL.
15. LIQUID STAKE SCREWS (76, 66, 70, 72, 73, 75, 93) WITH VARNISH (69) #7526, SUPPLIED BY GENERAL ELECTRIC CORP., SCHENECTADY, NEW YORK OR EQUAL.
16. 6 FLUTE, 8-36 NF-2B X 3/16 LG, FINISH: M624 PER SPEC. MIL-F-14072.
17. SOLDER TERMINALS (33) TO BE PLACED NEAREST TOP OF CHASSIS ON BOTH SIDES OF SHIELD AS SHOWN.
18. LUBRICATE SHAFT BUSHING (21) WITH LUBRICANT (20) PER SPEC. MIL-L-7870.
19. SOLDER CENTER PIN OF TUBE SOCKET (53) TO SHIELD (4).
20. INSTALL SWITCH SHAFT WITH ALL ROTOR NOTCHES IN LINE.
21. REMOVE END PLAY WITH WASHERS (3).
22. ALL RETAINER RINGS TO BE ASSEMBLED WITH BURR SIDE AWAY FROM BEARING SURFACE.
23. DIMENSIONS SHOWN ON THIS DRAWING DEFINE LIMITS FOR INTERCHANGEABILITY GAGING AND ARE TO BE USED AS A BASIS FOR ACCEPTING OR REJECTION OF THE COMPLETE ASSEMBLY.
24. ALL SOFT SOLDER PER SPEC. MIL-S-6872 USING ROSIN CORE SOLDER PER SPEC. QQ-S-571 COMP. SN 60.
25. IN ALL SPLIT BALLOONS, TOP FIGURE IS MATERIAL LIST ITEM INDICATOR, AND BOTTOM FIGURE IS QUANTITY.
26. A8 PART MAY BE SUPPLIED BY CENTRAL SCREW CO., CHICAGO, ILL., OR EQUAL.
27. COAT WITH VARNISH (88) PER SPEC. MIL-V-173, TYPE 1. MARKINGS SHALL MEET THE REQUIREMENTS OF SPEC. MIL-M-13231.
28. FINISH: P213 PER SPEC. MIL-F-14072. FINAL PAINT FILM #14110 GLOSS ENAMEL PER SPEC. FED. STD. #595 TO MEET THE APPLICABLE REQUIREMENTS OF SPEC. MIL-F-14072. PAINT THE ENTIRE HEAD (EXCLUDING UNDERSIDE).
29. ASSEMBLY SHALL BE WIRED ACCORDING TO WIRING ASSY SM-E-249014 TO PROVIDE CIRCUIT AS SHOWN ON SCHEMATIC DIA. SM-J-249190.
30. FINISH: M352 PER SPEC. MIL-F-14072. SCREW SHALL BE GAGED WITH A CLASS 2 BASIC GO RING AFTER PLATING.
31. REVISION 1954 OF ASA SHALL BE APPLICABLE TO ITEM 65.

A1

*S.W.E. PART NO.	ITEM	REQD.	PART NO.	DESCRIPTION	MAT'L.	MATL. SPEC.	NOTES
	92	1	MS35216-11	SCREW		FF-S-92	15
10S130317-7	91	AS REQD	———	SOLDER, SOFT			
	90	1	SM-B-343627	CAPACITOR, VARIABLE			
08S111280-43-1	89	3	MS35216-43	SCREW		FF-S-92	28
20S110664-1	88	AS REQD	———	VARNISH			27
572042-5	87	1	SM-D-343620-16	STUD, 6-32 NC-2A X 3/4 LG.	CRES		26
	86	4	SM-C-283228-2	CAPACITOR			
	85						
	84	1	SM-B-283268	SUPPORT-CAPACITOR			
	83						
	82						
	81	8	MS35200-12	SCREW		FF-S-92	
	80	3	MS35338-80	WASHER		FF-W-84	
	79	10	-79	WASHER		FF-W-84	
	78	77	MS35338-78	WASHER		FF-W-84	
	77	3	MS35216-23	SCREW		FF-S-92	
	76	2	-16	SCREW			15
	75	2	-14	SCREW			15
	74	26	-13	SCREW			
	73	29	MS35216-12	SCREW			15
	72	4	MS35200-15	SCREW			15
	71	12	-13	SCREW			
	70	2	MS35200-1	SCREW		FF-S-92	15
11S130318-4	69	AS REQD	———	WARNISH BLUE			15
MS35333-25	68	4	SM-D-343620-15	WASHER			14
572841-5	67	2	SM-D-343620-14	SCREW			12,13,30
	66	2	MS35216-19	SCREW 4-40 NC-2A		FF-S-92	15
03S111277-2	65	8	SM-D-343620-12	SCREW, OVAL, PT. SET	STEEL	ASA B18.3	16 & 31
	64	3	MS25082-7	NUT, FLAT, 3/8-32 NEF-2B			
A3 02S108015	63	24	SM-D-343620-10	NUT 4-40 NC-2B	CRES		4 & 11
02S108017	62	9	SM-D-343620-9	NUT 6-32 NC-2B	CRES		4 & 10
A4 02S101791	61	51	-8	NUT 4-40 NC-2B	CRES		9
572037-6	60	1	-7	WASHER FLAT, NO. 10	CRES		4 & 8
A5 572037-5	59	1	-6	WASHER FLAT NO. 8	CRES		4 & 7
572037-3	58	3	-5	WASHER FLAT, NO. 6	CRES		4 & 6
572037-2	57	9	-4	WASHER FLAT, NO. 4	CRES		4 & 5
572804	56	4	-3	WASHER FLAT			1 & 3
573175	55	18	SM-D-343620-2	WASHER ROUND, FLAT #8942			1 & 2
	54	4	TS103P01	SOCKET		~~MIL-S-12883~~	
	53	6	TS102P01	SOCKET		MIL-S-12883	19
	52	1	RW30G4R0	RESISTOR		MIL-R-26	
	51	1	SM-B-283236	CAPACITOR-FIXED			
	50	1	SM-B-283228-1	CAPACITOR-VARIABLE			
	49	1	SM-D-248863	FILTER - MECH.			
	48	1	SM-D-248862	FILTER - MECH.			
	47	1	SM-D-248861	FILTER - MECH.			
	46	1	SM-D-248860	FILTER - MECH.			
A7	45	1	RV2LAXSA101B	RESISTOR-VARIABLE		MIL-R-94	
A6	44	1	RV2LAXSA103B	RESISTOR-VARIABLE		MIL-R-94	
	43	3	SM-B-283178	CONNECTOR-RECEPT.			
	42	3	SM-B-283175	SPRING-SLEEVE			
	41	1	SM-B-283173	RING-RETAINER			22

*S.W.E. PART NO.	ITEM	REQD	PART NO.	DESCRIPTION	MATL	MATL SPEC	NOTES
	40	1	MS16628-25	RING-RETAINER			22
	39	2	SM-B-283167	NUT-LOCKING			
	38	1	SM-B-283163	BOLT-SPADE			
574851-3	37	2	SM-D-343620-1	WASHER, LOCK, SPLIT - NO. 3	CRES		
	36	2	SM-B-249271	TERMINAL, INSULATED			
	35	21	SM-B-249265	TERMINAL, INSULATED			
	34	3	SM-B-249257	TERMINAL, SOLDER			
	33	22	SM-B-249251	TERMINAL, SOLDER			17
	32	1	SM-D-249239	TRANSFORMER, I.F.			
	31	2	SM-D-249238	TRANSFORMER, I.F.			
	30	1	SM-D-249237	COIL ASSY			
	29	2	SM-B-249233	SECTION, ROTARY SWITCH			
	28	1	SM-C-249232	SECTION, ROTARY SWITCH			
	27	1	SM-B-249227	DETENT, ROTARY SWITCH			21
	26	4	SM-B-249226-2	SPACER, TUBULAR			
	25	6	SM-B-249226-1	SPACER, TUBULAR			
	24	2	SM-B-249219	INDUCTOR, R.F., TOROID			
	23	1	SM-B-249199	BRACKET, CAPACITOR			
	22	1	SM-B-249196	COUPLING, SHAFT			
	21	1	SM-B-249194	BUSHING W/NUT			18
A2 11S111256-6	20	AS REQD	———	LUBRICANT			18
	19	1	SM-C-249012	COVER, FILTER			
	18	1	SM-C-343636	CHASSIS ASSY			
	17	1	SM-B-249006	SHAFT, SWITCH			20
	16	1	SM-B-249004	BRACKET ASSY			
	15	2	SM-B-249005	POST - I.F.			
	14	1	SM-B-249004	BOARD ASSY, I.F.			
	13	1	SM-B-249001	BOARD ASSY, I.F.			
	12	1	SM-B-248998	SHAFT, B.F.O.			
	11	1	SM-C-248996	BRACKET, I.F.			
	10	1	SM-B-248995	SHIELD ASSY, I.F.			
	9	1	SM-B-248993	SHIELD ASSY, I.F.			
	8	1	SM-B-248992	SHIELD ASSY, I.F.			
	7	1	SM-E-249014	WIRING ASSY			29
24N205102	6	1	SM-C-343625	TCJ-3 TUNING UNIT			
	5	1	SM-B-248828	POST TAPPED			
	4	2	SM-B-248527	SHIELD, TUBE			19
	3	4	SM-B-248823	WASHER			
	2	1	SM-D-249234	TRANSFORMER, I.F.			
	1	1	SM-B-178433	COUPLER			

LIST OF MATERIAL

SM-C-343621	SC-DL-248775	
NEXT ASSY	USED ON	
APPLICATION		

UNLESS OTHERWISE SPECIFIED
DIMENSIONS ARE IN INCHES
TOLERANCES ON FRACTIONS ± — DECIMALS ± — ANGLES ± —

DRAWN BY John Ostrowski
CHECKED BY
CHIEF DRAFTS
ENG APPROVAL

~~STEWART WARNER ELECTRONICS~~
42428-PC-59
SIGNAL CORPS
REVIEWED PME
APPROVED PME
DATE 29 OCT 59

MECHANICAL ASSY. I.F.

SCALE 1/1

DEPARTMENT OF THE ARMY
SIGNAL CORPS ENGINEERING LABORATORIES
FORT MONMOUTH NEW JERSEY

SM-D-343620
SHEET 1 OF 3

WHEN REFERRING TO THIS DRAWING STATE DRAWING NO., APPLICABLE ISSUE SYMBOL, IF ANY, AND DATE

SCEL 2234 E C. R. CO. NO. 387

NOTICE: WHEN GOVERNMENT DRAWINGS, SPECIFICATIONS, OR OTHER DATA ARE USED FOR ANY PURPOSE OTHER THAN IN CONNECTION WITH A DEFINITELY RELATED GOVERNMENT PROCUREMENT OPERATION, THE UNITED STATES GOVERNMENT THEREBY INCURS NO RESPONSIBILITY NOR ANY OBLIGATION WHATSOEVER; AND THE FACT THAT THE GOVERNMENT MAY HAVE FORMULATED, FURNISHED, OR IN ANY WAY SUPPLIED THE SAID DRAWINGS, SPECIFICATIONS, OR OTHER DATA IS NOT TO BE REGARDED BY IMPLICATION OR OTHERWISE AS IN ANY MANNER LICENSING THE HOLDER OR ANY OTHER PERSON OR CORPORATION, OR CONVEYING ANY RIGHTS OR PERMISSION TO MANUFACTURE, USE, OR SELL ANY PATENTED INVENTION THAT MAY IN ANY WAY BE RELATED THEREIN.

"THIS DOCUMENT HAS BEEN PURCHASED BY THE GOVERNMENT AND MAY BE REPRODUCED AND USED IN CONNECTION WITH ANY GOVERNMENT PROCUREMENT OR MAINTENANCE OPERATION."

NOTE:
*FOR INFORMATION ONLY. CONTRACTOR MAY AT HIS OPTION DEVIATE FROM THESE PROCESS DETAILS

REVISIONS

SYM	DESCRIPTION	DATE	APPROVAL
A_{11}	(1),(2),(3),(4),(5),(6),(7),(8) SEE SHEET 1 FOR REV.; (9) CHANGED HARDWARE SIZE & QUANTITY (7 PLACES); (10),(11), SEE SHEET 3 FOR REV.	25 MAR 1965	21582-PC-61 REVD PME
B		7 MAR 1966	JLC JM RPB

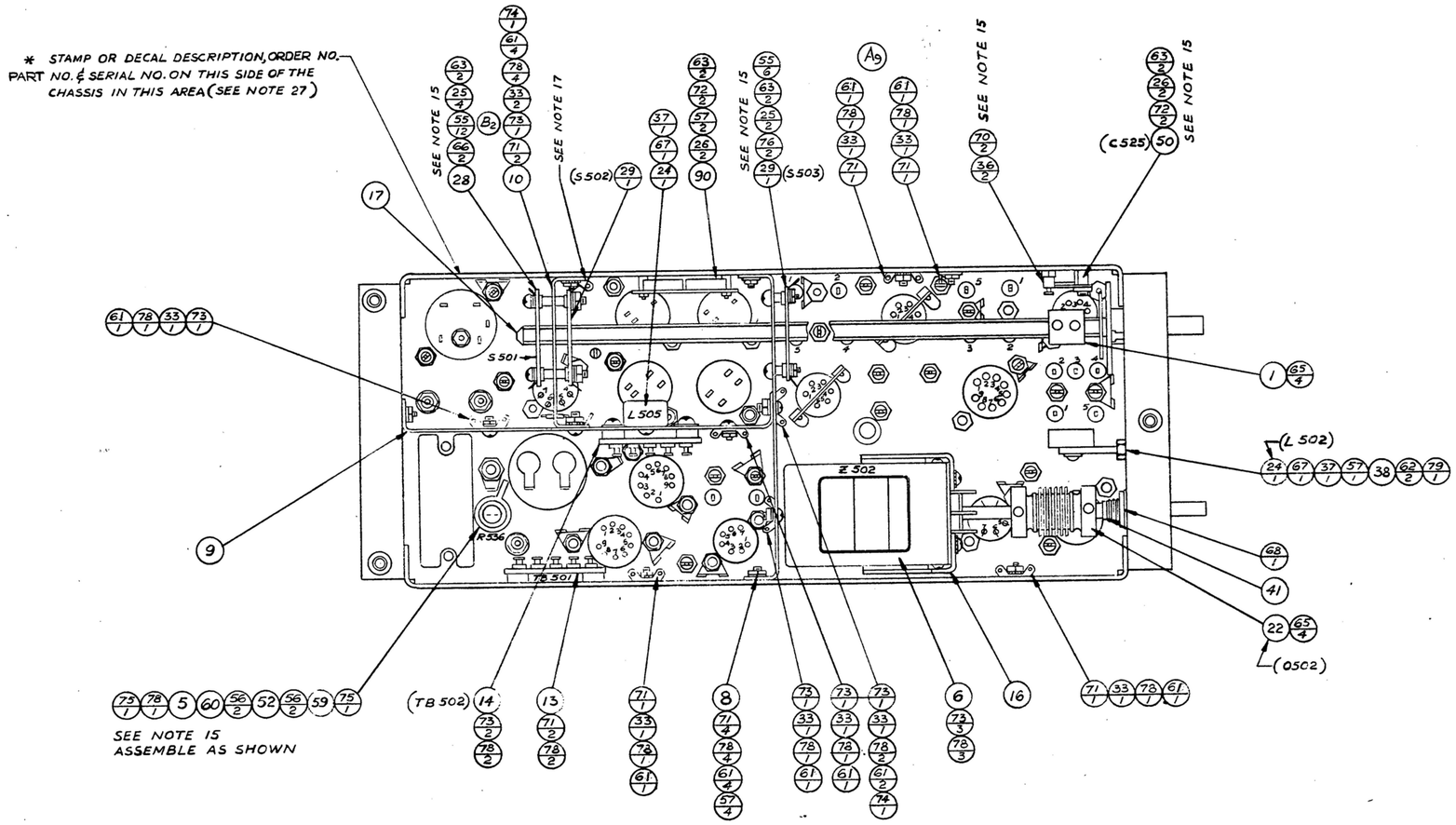

REQD	PART NO.	DESCRIPTION	MATL	MATL SPEC	NOTES

LIST OF MATERIAL

		UNLESS OTHERWISE SPECIFIED DIMENSIONS ARE IN INCHES TOLERANCES ON FRACTIONS ± — DECIMALS ± — ANGLES ± —	~~STEWART-WARNER ELECTRONICS~~ 42428-PC-59
		DRAWN BY John Ostapovich	SIGNAL CORPS
SM-C-343621	SC-DL-243775	CHECKED BY	REVIEWED PME
NEXT ASSY	USED ON	CHIEF DRAFTS	APPROVED PME
APPLICATION		ENG APPROVAL	DATE 28. OCT. 59

MECHANICAL ASSY. I.F.

SCALE 1/1

DEPARTMENT OF THE ARMY
SIGNAL CORPS ENGINEERING LABORATORIES
FORT MONMOUTH NEW JERSEY

SM-D-343620
SHEET 2

WHEN REFERRING TO THIS DRAWING STATE DRAWING NO., APPLICABLE ISSUE SYMBOL, IF ANY, AND DATE.

NOTICE: WHEN GOVERNMENT DRAWINGS, SPECIFICATIONS, OR OTHER DATA ARE USED FOR ANY PURPOSE OTHER THAN IN CONNECTION WITH A DEFINITELY RELATED GOVERNMENT PROCUREMENT OPERATION, THE UNITED STATES GOVERNMENT THEREBY INCURS NO RESPONSIBILITY NOR ANY OBLIGATION WHATSOEVER; AND THE FACT THAT THE GOVERNMENT MAY HAVE FORMULATED, FURNISHED, OR IN ANY WAY SUPPLIED THE SAID DRAWINGS, SPECIFICATIONS, OR OTHER DATA IS NOT TO BE REGARDED BY IMPLICATION OR OTHERWISE AS IN ANY MANNER LICENSING THE HOLDER OR ANY OTHER PERSON OR CORPORATION, OR CONVEYING ANY RIGHTS OR PERMISSION TO MANUFACTURE, USE, OR SELL ANY PATENTED INVENTION THAT MAY IN ANY WAY BE RELATED THERETO.

"THIS DOCUMENT HAS BEEN PURCHASED BY THE GOVERNMENT AND MAY BE REPRODUCED AND USED IN CONNECTION WITH ANY GOVERNMENT PROCUREMENT OR MAINTENANCE OPERATION."

NOTE: *FOR INFORMATION ONLY. CONTRACTOR MAY AT HIS OPTION DEVIATE FROM THESE PROCESS DETAILS

REVISIONS			
SYM	DESCRIPTION	DATE	APPROVAL
A11	(1),(2),(3),(4),(5),(6),(7),(8) SEE SHEET 1 FOR REV.; (9) SEE SHEET 2 FOR REV.; (10) ADDED ITEM 84/1; (11) CHANGED HDWE SIZE & QTY (14 PLACES)	25 MAR 1965	21582-PC 61 REVD PME
B		7 MAR 1966	JLC JM RP

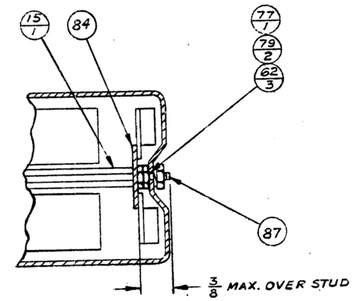

SECTION A-A

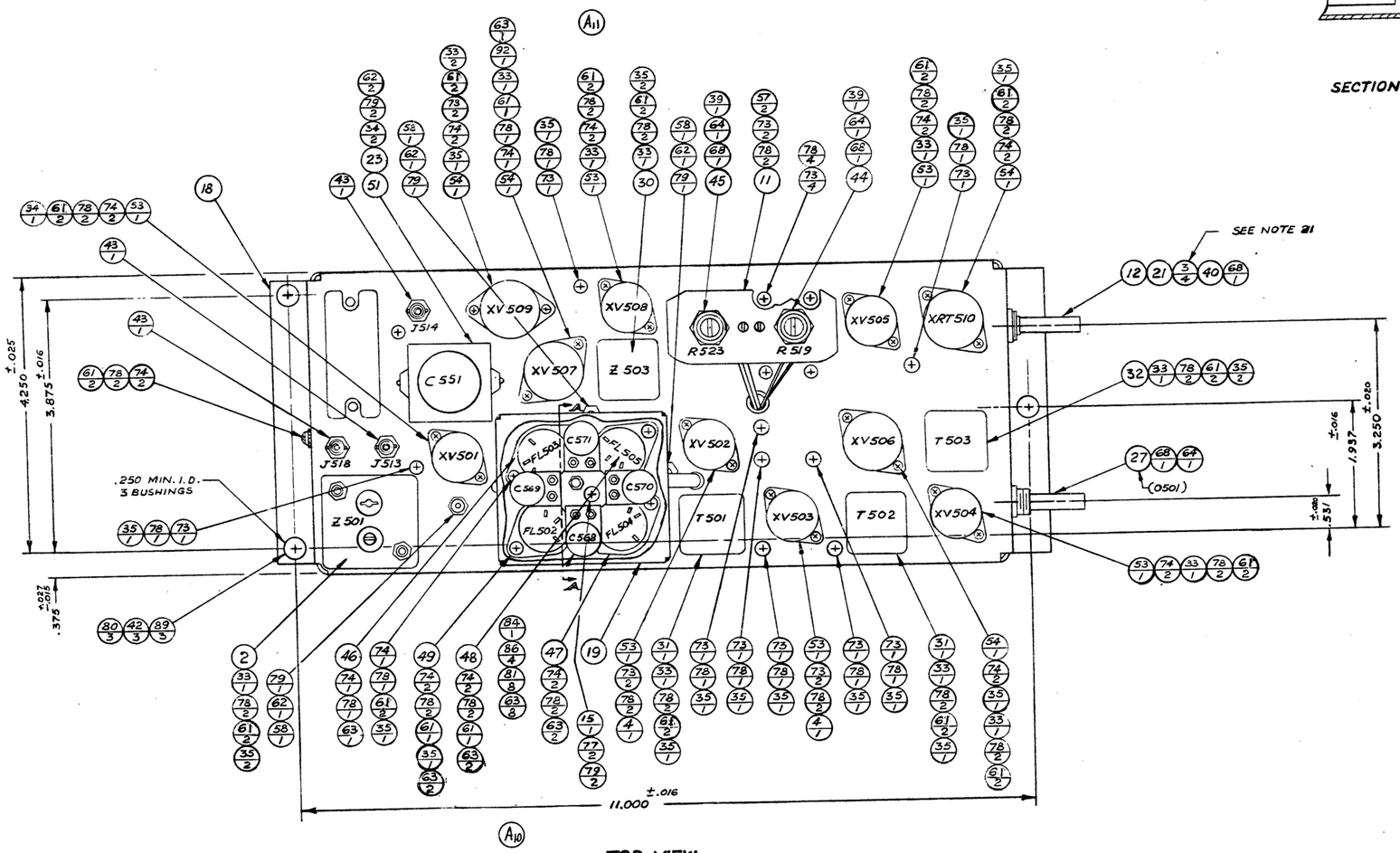

TOP VIEW

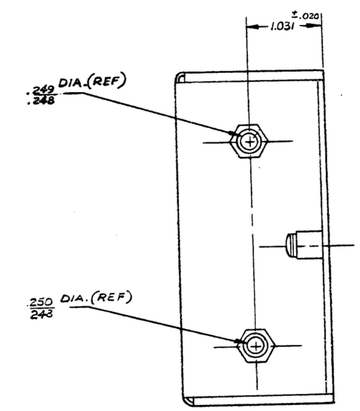

REQD	PART NO.	DESCRIPTION	MATL	MATL SPEC	NOTES

LIST OF MATERIAL

		UNLESS OTHERWISE SPECIFIED DIMENSIONS ARE IN INCHES TOLERANCES ON FRACTIONS ± ___ DECIMALS ± ___ ANGLES ± ___	~~STEWART-WARNER ELECTRONICS~~ 42428-PC-59
		DRAWN BY John Ostrowski	SIGNAL CORPS
SM-C-343621	SC-DL-248715	CHECKED BY	REVIEWED PME
NEXT ASSY	USED ON	CHIEF DRAFTS	APPROVED PME
APPLICATION		ENG APPROVAL	DATE 26 OCT. 59 SCALE 1/1

MECHANICAL ASSY. I.F.

DEPARTMENT OF THE ARMY
SIGNAL CORPS ENGINEERING LABORATORIES
FORT MONMOUTH NEW JERSEY

SM-D-343620
SHEET 3

WHEN REFERRING TO THIS DRAWING STATE DRAWING NO., APPLICABLE ISSUE SYMBOL, IF ANY, AND DATE.