NOTICE: UNDER GOVERNMENT DRAWINGS, SPECIFICATIONS, OR OTHER DATA ARE USED FOR ANY PURPOSE OTHER THAN IN CONNECTION WITH A DEFINITELY RELATED GOVERNMENT PROCUREMENT OPERATION, THE UNITED STATES GOVERNMENT THEREBY INCURS NO RESPONSIBILITY NOR ANY OBLIGATION WHATSOEVER; AND THE FACT THAT THE GOVERNMENT MAY HAVE FORMULATED, FURNISHED, OR IN ANY WAY SUPPLIED THE SAID DRAWINGS, SPECIFICATIONS, OR OTHER DATA IS NOT TO BE REGARDED BY IMPLICATION OR OTHERWISE AS IN ANY MANNER LICENSING THE HOLDER OR ANY OTHER PERSON OR CORPORATION, OR CONVEYING ANY RIGHTS OR PERMISSION TO MANUFACTURE, USE, OR SELL ANY PATENTED INVENTION THAT MAY IN ANY WAY BE RELATED THERETO.

"THIS DOCUMENT HAS BEEN PURCHASED BY THE GOVERNMENT AND MAY BE REPRODUCED AND USED IN CONNECTION WITH ANY GOVERNMENT PROCUREMENT OR MAINTENANCE OPERATION."

NOTE: *FOR INFORMATION ONLY. CONTRACTOR MAY AT HIS OPTION DEVIATE FROM THESE PROCESS DETAILS

REVISIONS			
SYM	DESCRIPTION	DATE	APPROVAL
A_2	(1) MS24233-1 WAS SM-B-343640; (2) MS24233-2 WAS SM-B-114043, MS242232-5 WAS SM-B-343639.	24 MAR 1965	21582-PC-61 REVD PME

NOTES:

1. APPLY A THIN COAT OF GREASE (54) PER SPEC MIL-G-7421 TO ALL TEETH RACK SLOTS & DETENT PLATE ON DIFFERENTIAL.
2. COAT RUBBER STAMPING WITH VARNISH (53) PER SPEC MIL-V-173, TYPE I. MARKINGS SHALL MEET THE TEST REQUIREMENTS OF SPEC. MIL-M-13231.
3. LIQUID STAKE WHERE INDICATED USING LOCTITE GRADE C (52) AS SUPPLIED BY AMERICAN SEALANTS, CO. OR EQUAL.
4. NUT, 6-32 NC-2B X 1/4 HEX. X 3/32 THK, DOUBLE CHAMFERED AS SUPPLIED BY CENTRAL SCREW CO., CHICAGO, ILLINOIS OR EQUAL.
5. PART MAY BE SUPPLIED BY RADIO CORPORATION OF AMERICA, NEW YORK, N.Y. OR EQUAL. TYPE 6DC6 IN ACCORDANCE WITH RCA SPECIFICATION 23-1-6DC6 AND GENERAL REQUIREMENTS OF MIL-E-1.
6. WIRE, TYPE S, DRAWN & ANNEALED TIN COATED.
7. FASTENER SEMS TYPE 4-40 NC-2A X 1/4 LG. EXTERNAL TOOTH LOCK WASHER & PHILLIPS RECESSED PAN HD SCREW. FINISH: ESOO PER SPEC MIL-F-14072.
8. CLAMPS TO BE TIGHTENED AFTER SHAFT (8) IS ASSEMBLED & UNIT (4) IS ALIGNED.
9. SWITCH SHAFT MUST SLIDE FREELY INTO SWITCH SHAFT SLEEVE AFTER SWITCH NUTS HAVE BEEN TIGHTENED. SOLDER BUSS WIRE (45) AFTER NUTS ARE TIGHTENED. SOLDER PER SPEC MIL-S-6872 USING ROSIN CORE SOLDER (60) PER SPEC. QQ-S-571, COMP SM-60.
10. REMOVE POST SM-B-248880 (33) ON TRAIN ASSY SM-D-343600 (7) BEFORE FINAL ASSY.
11. CRYSTAL OSC. MAY BE SET TO THE SAME FREQ. AS THE MEGACYCLE COUNTER READING.
12. NOTCH IN ROTORS ARE TO BE ALIGNED ON ALL SWITCHES BEFORE ASSEMBLING SHAFT.
13. FINISH: P213 PER SPEC MIL-F-14072. FINAL PAINT FILM NO. 14110, GLOSS ENAMEL PER FED. STD. 595 TO MEET THE APPLICABLE REQUIREMENTS OF SPEC MIL-F-14072. PAINT THE ENTIRE HEAD (EXCLUDING UNDERSIDE).
14. IN ALL SPLIT BALLOONS, TOP FIGURE IS MATERIAL LIST ITEM INDICATOR & BOTTOM FIGURE IS QUANTITY.
15. 6-32 NC-2A X .250/.244 HEX. HD X .080/.067 THK X 5/16 LG. FINISH: ESOO PER MIL-F-14072.
16. DIMENSIONS SHOWN ON THIS DRAWING DEFINE LIMITS FOR INTERCHANGEABILITY GAGING AND ARE TO BE USED AS A BASIS FOR ACCEPTANCE OR REJECTION OF THE COMPLETED ASSEMBLY.
17.
18. ASSEMBLY SHALL BE WIRED IN ACCORDANCE WITH WIRING ASSY. SM-E-249101 TO REFLECT THE CIRCUIT SHOWN ON SCHEMATIC DIAGRAM SM-J-249150.
19. REMOVE INSERTS (30 & 73 OF ITEM 7) BEFORE INSTALLATION OF GEAR TRAIN ASSY. (7).

A_2

ITEM	*S.W.E. PART NO.	REQD	PART NO.	DESCRIPTION	MAT'L.	MAT'L. SPEC.	NOTES
60	10S130317-7	AS REQ'D	———	SOLDER, SOFT		QQ-S-571	9
59		2	MS15795-306	WASHER, FLAT			
58							
57							
56	03S111280-24-1	3	MS35216-24	SCREW		FF-S-92	13
55	03S111280-43-1	2	MS35216-43	SCREW		FF-S-92	13
54	11S111255-5	AS REQD.	———	GREASE			1
53	20S110664-1	AS REQ'D	———	VARNISH			2
52	11S130318-11	AS REQ'D.	———	LOCTITE			3
51		2	MS35338-80	WASHER		FF-W-84	
50		12	MS35338-79	WASHER		FF-W-84	
49		48	MS35338-21	WASHER		FF-W-84	
48		4	MS35216-24	SCREW		FF-S-92	
47		1	MS35216-23	SCREW		FF-S-92	
46		48	MS35216-12	SCREW		FF-S-92	
45	30S110663-39	AS REQD	SM-D-343629-5	WIRE #22		MIL-W-3861	6
44	02S108017	4	SM-D-343629-4	NUT	CRES		4
43	6DC6	1	SM-D-343629-3	TUBE		MIL-E-1	5
42	03S111282-	24	SM-D-343629-2	FASTENER	CRES	ASA-B27.1	7
41	03S111281-9	3	SM-D-343629-1	SCREW	CRES	ASA-B18.6	15
40		2	5814A	TUBE		MIL-E-1	
39		1	5654/6AK5W	TUBE		MIL-E-1	
38		3	6C4	TUBE		MIL-E-1	
37	26M205116	2	MS-24232-5	SHIELD			
36	26P202262	4	MS-24233-2	SHIELD			

A_1

ITEM	*S.W.E. PART NO.	REQD	PART NO.	DESCRIPTION	MATL	MATL SPEC	NOTES
35	26M205117	1	MS24233-1	SHIELD			
34		2	SM-B-283175	SPRING, SLEEVE			
33		18	SM-C-249245	CORE, FERRITE			
32		6	SM-C-249244	CORE, POWDERED IRON			
31		1	SM-E-249101	WIRING ASSY, R.F.			18
30		1	SM-D-249100	CHASSIS ASSY, R.F.			
29		3	SM-D-249099	COIL ASSY, I.F.			
28		3	SM-D-249098	COIL ASSY, IF			
27		2	SM-D-249097	COIL ASSY, R.F.			
26		2	SM-D-249096	↑			
25		2	SM-D-249095				
24		2	SM-D-249094				
23		2	SM-D-249093	↓			
22		2	SM-D-249092	COIL ASSY, R.F.			
21		1	SM-D-249091	COIL ASSY, ANT.			
20		1	SM-D-249090	↑			
19		1	SM-D-249089				
18		1	SM-D-249088				
17		1	SM-D-249087	↓			
16		1	SM-D-249086	COIL ASSY-ANT.			
15		12	SM-B-249073	PLATE ASSY, ADJ			
14		12	SM-B-249072	PLATE ASSY, ADJ			
13		1	SM-B-249065	OVEN ASSY, XTAL			
12		1	SM-C-343632	RACK ASSY, I.F.			
11		1	SM-C-343631	RACK ASSY, I.F.			
10		3	SM-C-343630	RACK ASSY, HIGH			
9		3	SM-C-343628	RACK ASSY, LOW			
8		1	SM-B-343668	SHAFT, R.F., SWITCH			
7		1	SM-D-343600	TRAIN ASSY, GEAR			1, 19
6							
5		48	SM-B-248858-1	WASHER			
4		1	SM-D-249007	OSCILLATOR ASSY			
3		16	SM-B-178699	SPRING			
2		2	SM-B-178508	SPRING			
1		1	SM-C-178506	BRACKET			

LIST OF MATERIAL

NEXT ASSY	USED ON
*SWE APPLICATION	

NEXT ASSY	USED ON
SM-D-343619	SC-DL-248775
APPLICATION	

UNLESS OTHERWISE SPECIFIED
DIMENSIONS ARE IN INCHES
TOLERANCES ON
FRACTIONS — DECIMALS — ANGLES —

Drawn By: C. Bogdanski
Checked By: C. Bogdanski
Chief Draftsman: C. Bogdanski
Eng. Approval: [illegible]

~~WARNER~~
~~TECHNICAL DATA~~ NO 42428-PC-59
SIGNAL CORPS
REVIEWED PME
APPROVED PME
DATE 6 NOV. 59
SCALE —

FINAL ASSY.-RF

DEPARTMENT OF THE ARMY
SIGNAL CORPS ENGINEERING LABORATORIES
FORT MONMOUTH NEW JERSEY

SM-D-343629
SHEET 1 OF 3 SHEETS

WHEN REFERRING TO THIS DRAWING STATE DRAWING NO., APPLICABLE ISSUE SYMBOL, IF ANY, AND DATE.

NOTICE: UNLESS GOVERNMENT DRAWINGS, SPECIFICATIONS, OR OTHER DATA ARE USED FOR ANY PURPOSE OTHER THAN IN CONNECTION WITH A DEFINITELY RELATED GOVERNMENT PROCUREMENT OPERATION, THE UNITED STATES GOVERNMENT THEREBY INCURS NO RESPONSIBILITY NOR ANY OBLIGATION WHATSOEVER; AND THE FACT THAT THE GOVERNMENT MAY HAVE FORMULATED, FURNISHED, OR IN ANY WAY SUPPLIED THE SAME BE REGARDED BY IMPLICATION OR OTHERWISE AS IN ANY MANNER LICENSING THE HOLDER OR ANY OTHER PERSON OR CORPORATION, OR CONVEYING ANY RIGHTS OR PERMISSION TO MANUFACTURE, USE, OR SELL ANY PATENTED INVENTION THAT MAY IN ANY WAY BE RELATED THEREIN.

"THIS DOCUMENT HAS BEEN PROCURED BY THE GOVERNMENT AND MAY BE REPRODUCED AND USED IN CONNECTION WITH ANY GOVERNMENT PROCUREMENT OR MAINTENANCE OPERATION."

NOTE: *FOR INFORMATION ONLY. CONTRACTOR MAY AT HIS OPTION DEVIATE FROM THESE PROCESS DETAILS

REVISIONS			
SYM	DESCRIPTION	DATE	APPROVAL
A2	SEE SHEET 1 FOR REV.	24 MAR 1963	21582-PC-6 REVD PRC

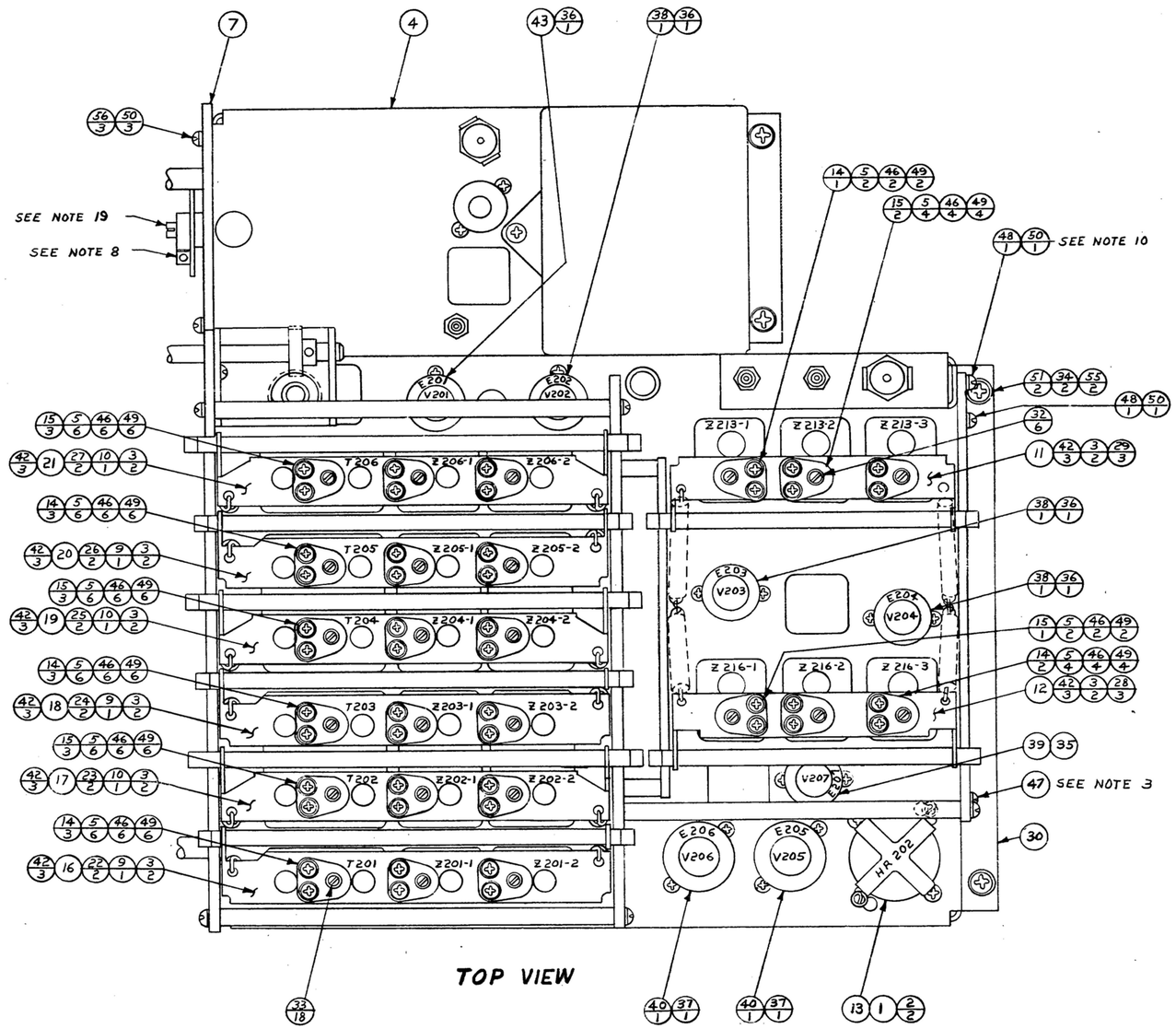

TOP VIEW

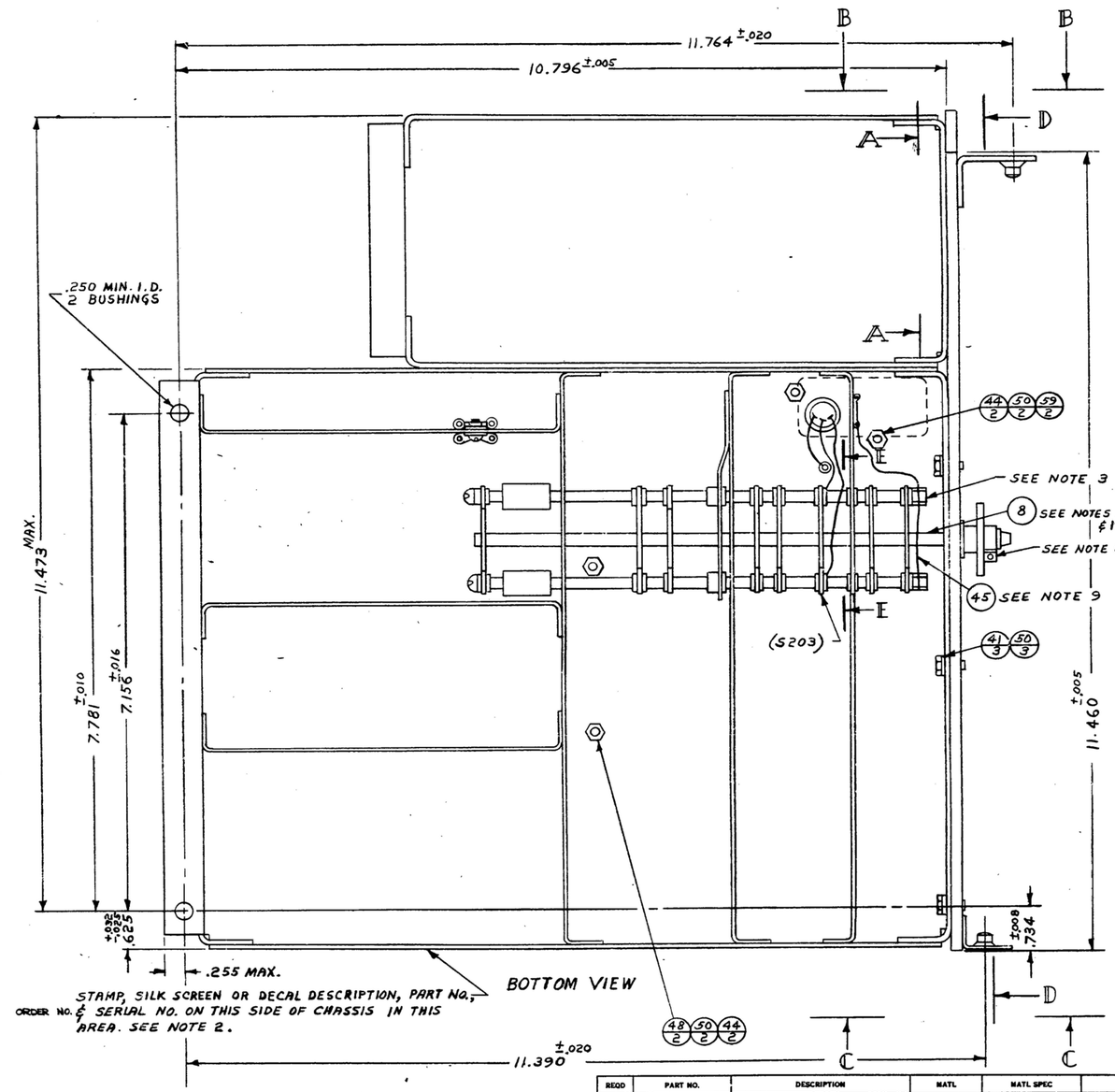

BOTTOM VIEW

REQD	PART NO.	DESCRIPTION	MATL	MATL SPEC

LIST OF MATERIAL

SM-D-343619	SC-DL-248775	UNLESS OTHERWISE SPECIFIED DIMENSIONS ARE IN INCHES TOLERANCES ON FRACTIONS DECIMALS ANGLES ±.005	~~STEWART WARNER ELECTRONICS~~ ORDER NO. 42428-PC-59
NEXT ASSY	USED ON	Drawn By: C. Boczkowski	SIGNAL CORPS
APPLICATION		Checked By:	REVIEWED PME
		Chief Drafts	APPROVED PME
		Eng Approval	DATE 29 OCT 59

FINAL ASSEMBLY- R.F.

SCALE 1/1

DEPARTMENT OF THE ARMY
SIGNAL CORPS ENGINEERING LABORATORIES
FORT MONMOUTH NEW JERSEY

SM-D-343629
SHEET 2

SCEL 2234E C. B. CO., NO. 267 49751

NOTICE: UNLESS GOVERNMENT DRAWINGS, SPECIFICATIONS, OR OTHER DATA ARE USED FOR ANY PURPOSE OTHER THAN IN CONNECTION WITH A DEFINITELY RELATED GOVERNMENT PROCUREMENT OPERATION, THE UNITED STATES GOVERNMENT THEREBY INCURS NO RESPONSIBILITY NOR ANY OBLIGATION WHATSOEVER; AND THE FACT THAT THE GOVERNMENT MAY HAVE FORMULATED, FURNISHED, OR IN ANY WAY SUPPLIED THE SAME WAS NOT TO BE REGARDED BY IMPLICATION OR OTHERWISE AS IN ANY MANNER LICENSING THE HOLDER OR ANY OTHER PERSON OR CORPORATION, OR CONVEYING ANY RIGHTS OR PERMISSION TO MANUFACTURE, USE, OR SELL ANY PATENTED INVENTION THAT MAY IN ANY WAY BE RELATED THERETO.

"THIS DOCUMENT HAS BEEN PURCHASED BY THE GOVERNMENT AND MAY NOT BE REPRODUCED AND USED IN CONNECTION WITH ANY GOVERNMENT PROCUREMENT OR MANUFACTURE OPERATION."

NOTE: *FOR INFORMATION ONLY, CONTRACTOR MAY AT HIS OPTION DEVIATE FROM THESE PROCESS DETAILS

REVISIONS			
SYM	DESCRIPTION	DATE	APPROVAL
A2	SEE SHEET 1 FOR REV.	24 MAR 1965	21582-R-61 REV. PME

VIEW A-A
ROTATED 90° CCW

(DIMENSIONS TO BE GAGED BEFORE ASS'Y. OF XTAL OSC (4) TO RF UNIT.)

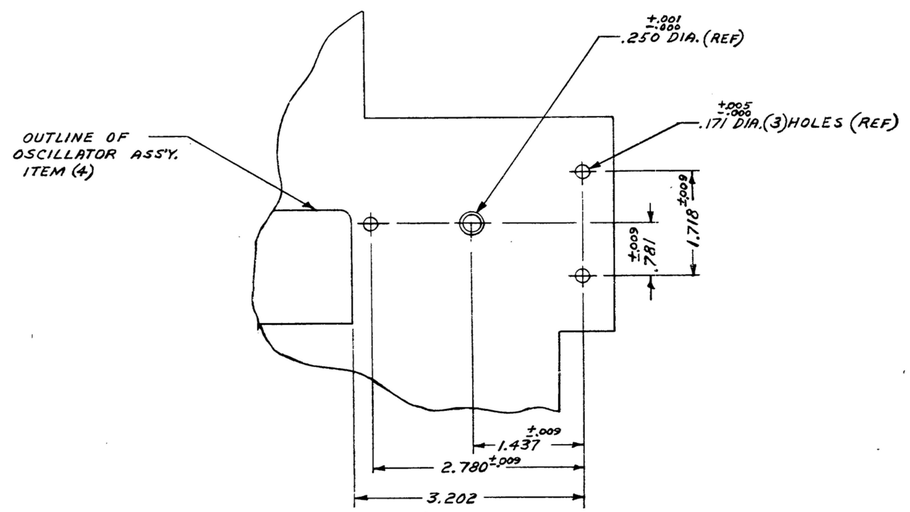

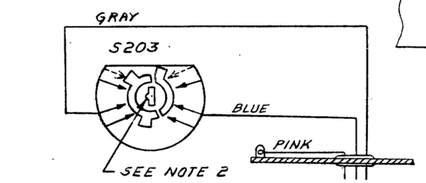

SWITCH POSITION AT 7. +000 MC AS VIEWED FROM DRIVEN END.

VIEW E E
ROTATED 90° CW

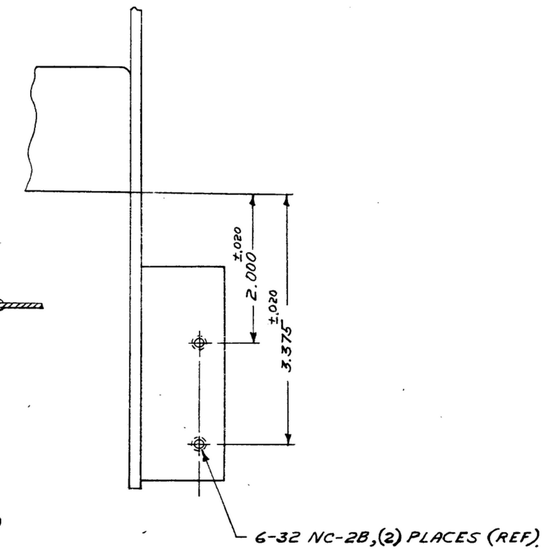

VIEW B-B

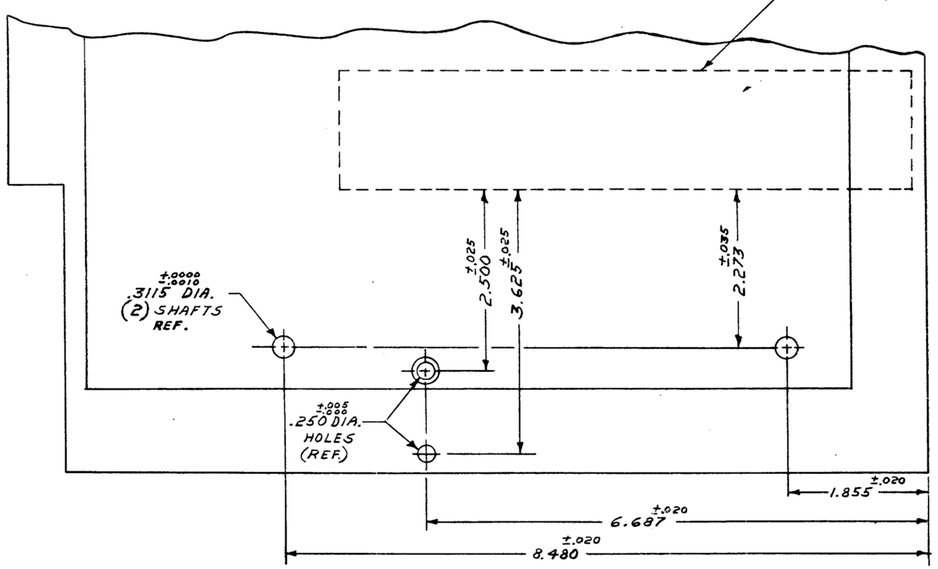

VIEW D D
ROTATED 90° CCW

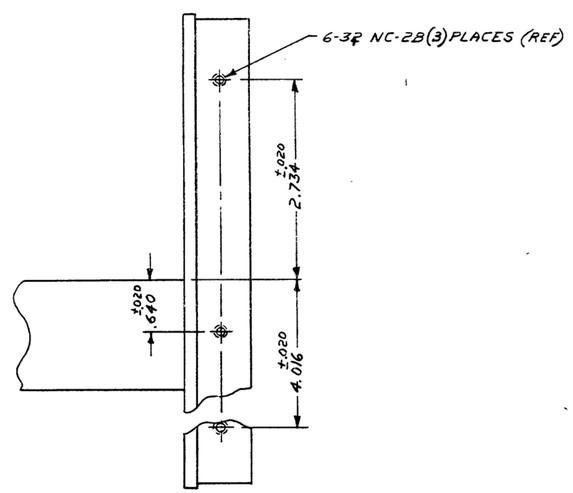

VIEW C C

REQD	PART NO.	DESCRIPTION	MATL	MATL SPEC

LIST OF MATERIAL

		UNLESS OTHERWISE SPECIFIED DIMENSIONS ARE IN INCHES TOLERANCES ON FRACTIONS DECIMALS ANGLES — ±.005 —	~~STANDARD WARNER ELECTRONICS~~ ORDER NO. 42428-PC-59
		Drawn By. C. Bogdanski	SIGNAL CORPS
		Checked By C. Bogdanski	REVIEWED PME
SM-D-343619	SC-DL-248775	Chief Draftsman C. Bogdanski	APPROVED PME
NEXT ASSY	USED ON	Eng. Approval	DATE 10 NOV 59
APPLICATION			SCALE 1/1

FINAL ASS'Y. RF

DEPARTMENT OF THE ARMY
SIGNAL CORPS ENGINEERING LABORATORIES
FORT MONMOUTH NEW JERSEY

SM-D-343629
SHEET 3

WHEN REFERRING TO THIS DRAWING STATE DRAWING NO., APPLICABLE ISSUE SYMBOL, SUF. AND DATE.