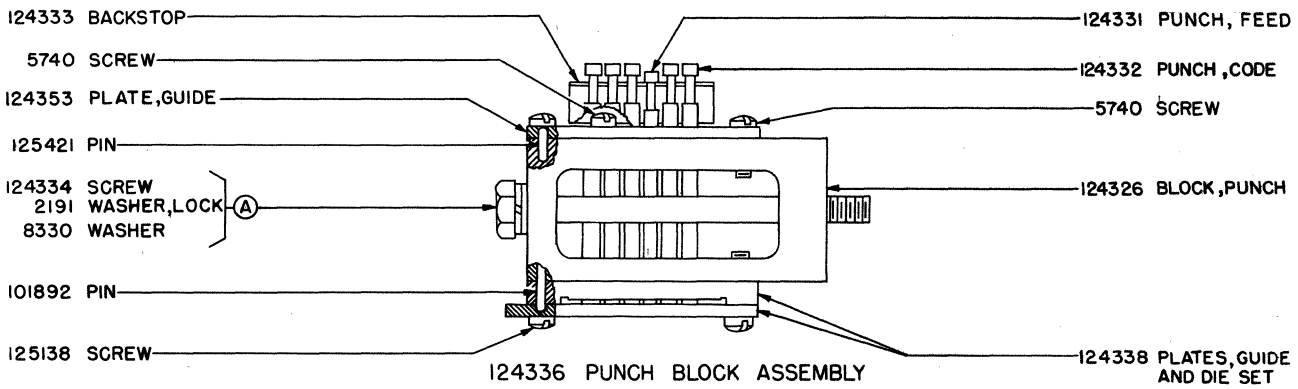

124336 PUNCH BLOCK ASSEMBLY
5 UNIT CODE WITH IN-LINE FEED HOLE
(EXCLUDES PARTS MARKED Ⓐ)

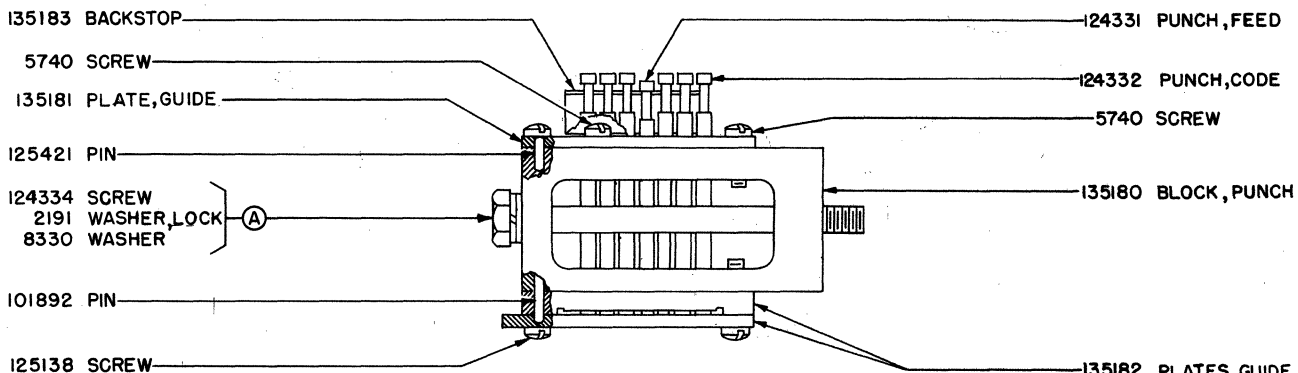

135177 PUNCH BLOCK ASSEMBLY
6 UNIT CODE WITH ADVANCED FEED HOLE
(EXCLUDES PARTS MARKED Ⓐ)

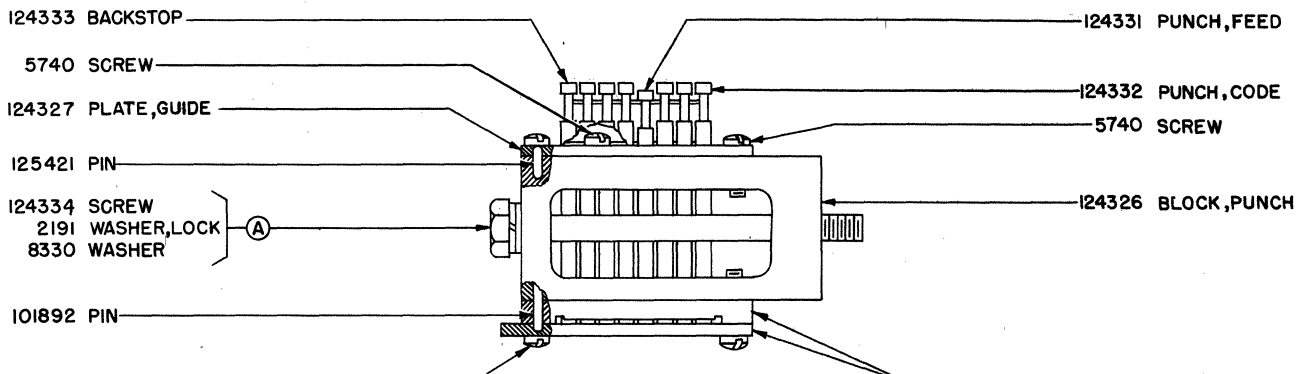

124325 PUNCH BLOCK ASSEMBLY
7 UNIT CODE WITH IN-LINE FEED HOLE
(EXCLUDES PARTS MARKED Ⓐ)